THE

EARLIER YEARS

1910 - 1924

The Vintage Radio Identification SKETCH-BOOKS of D. H. MOORE

VOLUME VIII

The Editorial Group, Ltd...

P.O. BOX 521 • PALO ALTO, CALIFORNIA

© D.H.MOORE - 1954/1985

DEDICATION

.....to a way of life
that should not have
been forgotten.

The concept and execution of these SKETCH-BOOKS, including research, design, layout, and all free-hand sketches, has been a labour of love by D.H.MOORE.

Acknowledgements

Bits and pieces of these volumes have been published, referenced, reviewed in several media devoted to the hobby of vintage Radio, including a few foreign countries, such as New Zealand, Japan, Canada and England. Such favourable notice for such a labour of love is hereby acknowledged in appreciation.

Thanks must also be offered Stan Lopes who tediously editted the technical authenticity of circuitry to be found in Volumes II through VII. His labours have resulted in an obvious authenticity, we feel, especially for those who delight in tracing out vintage schematics. He even found technical errors in original sources!

Special thanks are due Douglas G. Yule, who originally sponsored this effort as a contribution to the hobby, without whose prompting these Sketch-Books may not have come into existence. Also, thanks are given to Howard W. Granoff, of the OLDE TYME RADIO COMPANY, whose unflagging enthusiasm and publicity has done much to make these Sketch-Books known within the fraternity.

And in as much as fraternalism is the basis for shared enthusiasm, which is what any hobby is, and because of the original and dramatic shift away from the current vintage Radio fare, it follows that the publishers and the author, being human, would appreciate hearing from you, your comments, along with any suggestions you'd care to offer with an eye to producing bigger and better vintage Radio literature in future.

Vol. VIII: The Earlier Years

Frontispiece
INTRODUCTION..... 1

An Inexpensive Xtl. Set..... 32
ARMSTRONG Feed-Back Circuits 33
ARMSTRONG Super-Regen..... 34
ARMSTRONG Super-Regen..... 35
AUDIO Control Panel..... 53
Australian 3-Tube Xmtr..... 11
AUTOPLEX Circuit..... 87

BASCO TRF..... 83
Basketweave Coil Form..... 51
Battery-less Receiver..... 46
Binocular Coil Forms..... 52
BIRNELLI-JONES Rcvr..... 35A
BISHOP Ultra-Regen..... 88

Classic Circuits..... 4
Classic 3-Circuit Tuners.... 75
COCKADAY 4-Circuit Tuner.... 88
Coil Configurations..... 13
Combined SW/LW Circuit..... 95
Construction 1-H Choke..... 44
Crystal Detectors-..... 36,93
Crystal Radiophone..... 70
Crystal Test Circuit..... 92

Damped/Undamped Receiver.... 16
DeFOREST Quenched-Gap Xmtr.. 10
Double Crystal Receiver..... 47
"DOUGHNUT" Receiver..... 9

ED Modular Units..... 125
Emanon 2-Tube Receivers..... 118

FADA Model 160..... 132
FEDERAL Regenerative..... 17
Feedback w/ Loose Cplng..... 33
FLEMING Valve Receiver..... 96

FLEWELLING 1-Circuit Tuner..... 71
FLEWELLING 1-Tube Receiver..... 73
FLEWELLING Circuit No. 1..... 71
FLEWELLING Circuit No. 2..... 100
"FILADYNE" Regenerative..... 142
FOX 2-Stage AF Amplifier..... 97

GELULA DX-Wonder..... 126
GERNSBACK "Interflex"..... 89
GERNSBACK "Megadyne"..... 119
GREBE CIRCUITS..... 21
GND & Counterpoise Notes..... 146

HARTLEY Chirp Eliminator..... 148
HAYNES DX Receiver..... 116
HAZELTINE's "Neutrodyne"..... 130
"HETROPLEX" Coil Data..... 128
Honeycomb Coil Data..... 69

KENNEDY Model 220..... 102
KENNEDY Model 281..... 102
KENNEDY SW. Receiver..... 122

Loop Connexions, Typical..... 49
Loop Construction..... 50
Loose-Coupler Construction..... 43
Low Power Transmitter..... 147,149

MAGNAVOX Power Amplifier..... 30
MARCONI 106D Receiver..... 137
MARCONI Direction Finder..... 140
Mercury-Arc Rectifier..... 64
Modulator Xfrmr. Construction.. 12
Multi-Valve Connexions..... 91

NATIONAL Radio Hook-Ups..... 81
"Neutrodon" Capacity Changing.. 133
"Neutroformer" Placement..... 134
NORTHERN ELECTRIC R-11..... 98.136

One-DH Aircraft Transmitter.... 147

Panel Configurations..... 15
PARAGON R-A-10..... 31
"PARADEX" Unitised Receivers... 152
Pocket Crystal Set..... 20
Pocket Tuner-Coupler..... 55

RAULAND Hook-Up..... 101
Regenerative Loop Set..... 35B
Regeneration Notes..... 67
REINARTZ Circuits..... 103
R.E.L. Low-Loss Tuner..... 123
REX Eliminator Construction. 56
"RETROSONIC" Circuit..... 119

Single Circuit Non-Regen.... 65
Six-AKW Transceiver..... 151
Six Watt APW Transmitter.... 11
SODION Tube Circuits..... 127
"SOUTHERN CROSS" Xmtr..... 150
Standard 3-Circuit Regens... 87
STIENITE Crystal Set..... 84,135
Story Of The Arc..... 143
"SUPERDYNE: Receiver..... 85

"TRANSOCEANIC INTERFLEX".... 82
"TRINADYNE" Pseudo-Reflex... 142
Trouble-Shooting Reflexes... 120
Tube DET & XTL Tuner..... 45
Tube For Xtal. Substitution. 48
Triple Honeycomb Regen..... 39
Tuning Honeycomb Coils..... 68
Tungar Battery Charger..... 63

"ULTRADYNE" Principle for CW 122

Variometer Connexions..... 66
Variometer vs. Vario-Cplr... 3

U.S.NAVY Receiver..... 18

Wave-Trap Circuitry..... 74
WESTINGHOUSE Model RC..... 129
WESTINGHOUSE Single Circuit. 19

* * *
* *
*

NOTE

A seperate MONOGRAPH has been prepared for most REFLEX CIRCUITS.

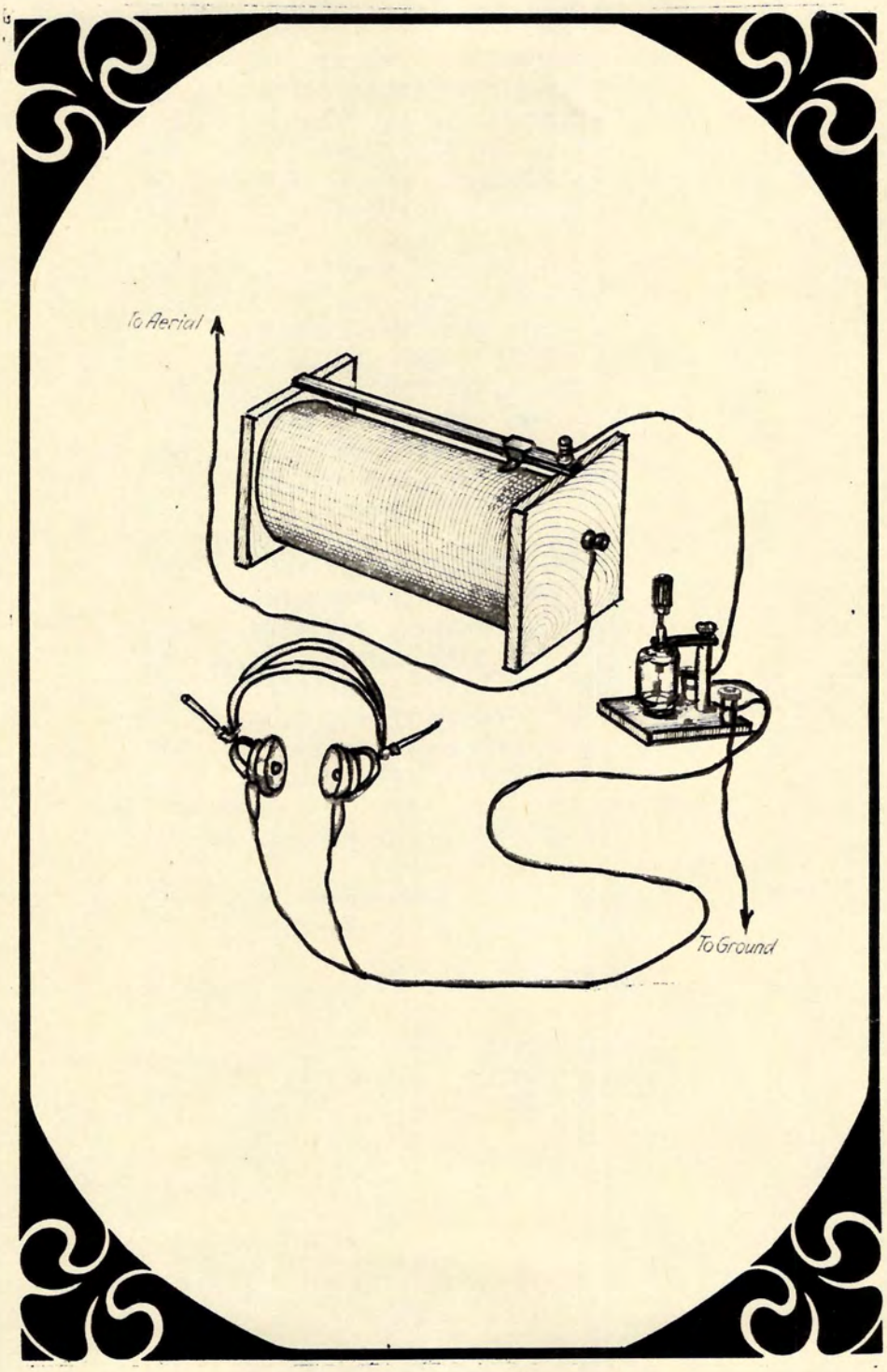

AS IT WAS IN THE BEGINNING ....

INTRODUCTION

The preceding volumes of these Sketch-Books came into being predicated upon a rather broad, sometimes whimsical personalised view of the most active and imaginative period of the rise of Radio - 1925-1931. They also sought to re-introduce the obvious personal relateability of early Radio, as well as the pervasive sense of Romance experienced by everyman when he is presented with a new sociological phenomenon - which Radio certainly was.

This eighth volume of my Sketch-Books came into being, from several sources, because of rather flattering insistence of many readers, technical librarians, and a couple museums, mostly foreign. I admit to doubts as to the degree of national interest in the period, in-as-much as there was very little of personal relateability in it.

The period covered herein offered little that was truly innovative or new, being chiefly concerned with CW transmitters and receivers, along with the ongoing controversy of which International code to adopt. The Kaiser's War, as with all wars, forced technological advances upon the nacent art of Radio, and immediately thereafter we saw giant strides being taken.

While I have included a few passing references to a period prior to 1910, they have been included primarily for their academic or historical interest. Also, of course, there are too many references to that period - good, bad, indifferent - readily available, and nothing would be gained by re-hashing incomplete or unorganised material. From 1922 Radio marched inexoribly towards corporate and commercially orieentation, that led to uninteresting standardisation and the two basic circuits in the Forties - one of the latter, incidentally, again a result of another German-instigated war.

Subject period may be loosely categorised as follows:

Crystal Sets	Regeneration	Super-Regeneration
Reflex	Inverse-Duplex	Tuned Radio Freq.
Neutrodyne	Super-Het	

A glance at the Table of Contents to this volume will give you a good idea, in the pages which follow, the Alpha and Omega of the circuitry of the period, together with constructional data for such items as transformers, chokes, RFCs, AF amplifiers, coil-winding data.

Actually, most all of the early circuits are easy to build, and the results could surprise you. Those that I have constructed have

performed exactly as the original claims for them said they would. The results obtained for a couple of circuits from 1922, for example, were truly astonishing, in terms of distance and sensitivity and fidelity.

You will also find a couple foreign circuits and comments I felt were necessary to round out discussion of the period under review as several advances in Radio on the American scene came from abroad.

To iterate the original premise of these Sketch-Books as is spelled-out in the Introduction to Volime I: this work is NOT a treatise on the history of Radio, a comprehensive encyclopedia of technical specifications, or a definitive work of any kind. Rather, it remains a unique single source for relateable, organised, hard-to-find data that is not likely to be found anywhere else, and that includes such standard references as Rider, Sam, Beitmann, McMahon, Gheraldi, et al.

I have not been concerned with the theory of Radio, but offer a literary dramatisation of the personal relateability, the romance, the human side of early Radio.

* * *
* *
*

VARIOMETER vs. VARIO-COUPLER

A VARIOMETER is a variable inductance coil used to give a continuous variation of inductance in a circuit. They are used for tuning to short wavelengths. They consist of two coils connected in series so that one coil can rotate inside the other. Rotating the inner coil successively opposes or adds to the inductance of the outer coil.

A VARIO-COUPLER consists of two coils, one rotating within the other, without physical connexions, other than the inductance between them. It is used to transfer energy from one circuit to another. It is satisfactory only for short wavelengths. The Primary coil is tapt so as to give the proper inductance for different wavelengths, corresponding to the variation secured by using different sizes of honeycomb coils, for example. Below are identification sketchs of both, along with the electrical symbol used on early schematics.

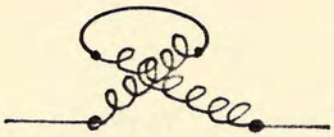

VARIOMETER

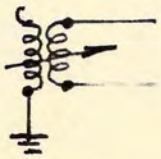

VARIO-COUPLER

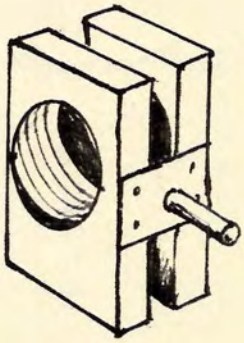

WORKRITE - 1922
Original Cost $5

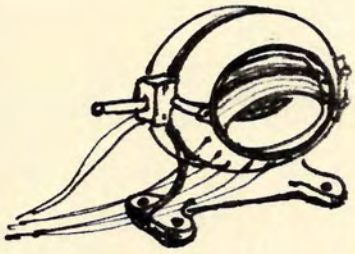

PIONEER - 1923
Original Cost $7.50

THE CLASSIC CIRCUITS

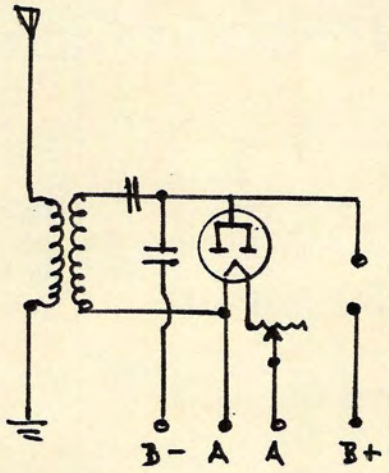

TYPICAL AUDION CIRCUIT, 1906

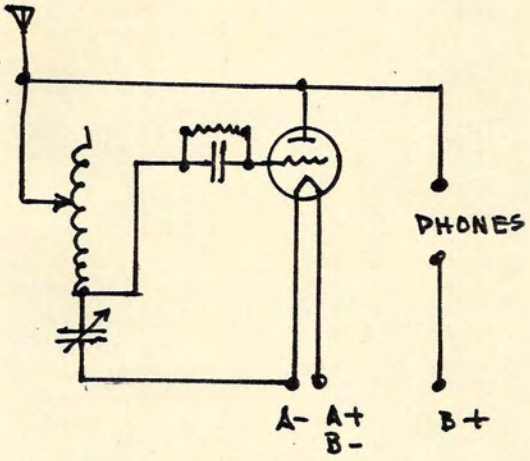

ULTRA-AUDION - 1913

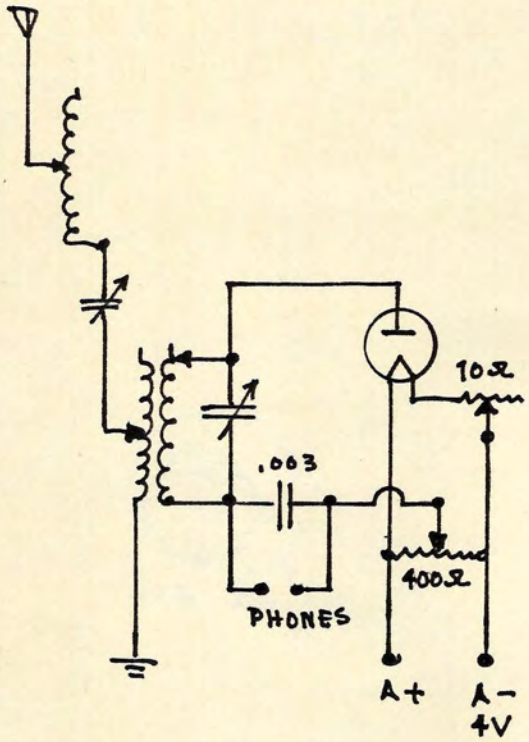

FLEMING VALVE CIRCUIT - 1908

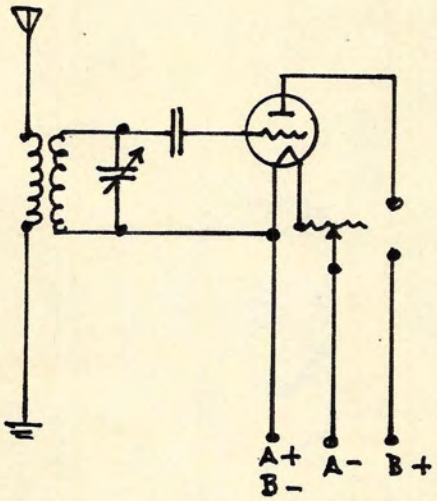

DeFOREST CIRCUIT - 1908

THE CLASSIC CIRCUITS

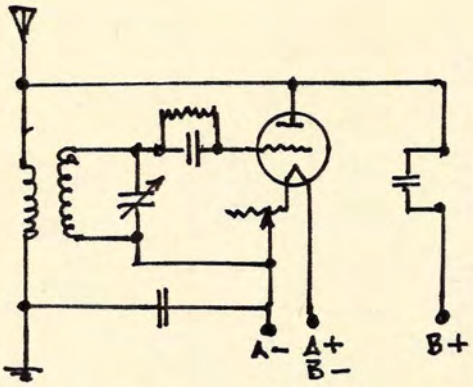

SINGLE CONTROL REGEN.

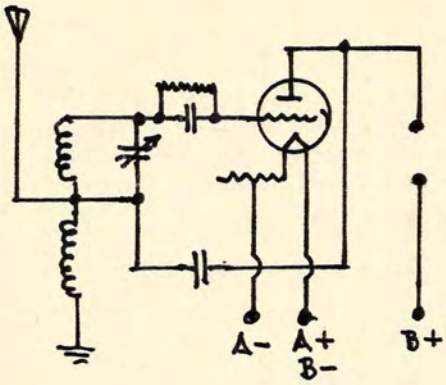

CONDENSER REGENERATIVE

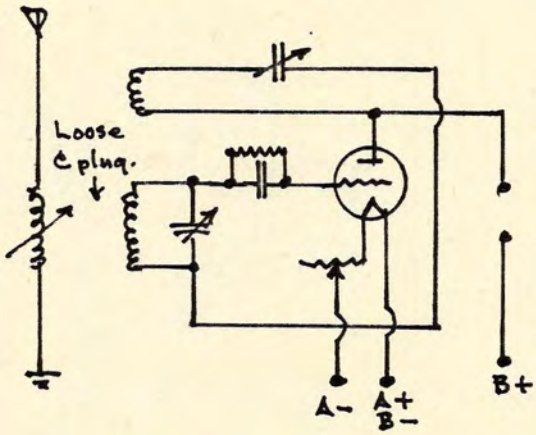

ARMSTRONG-WEAGNAT FEED-BACK

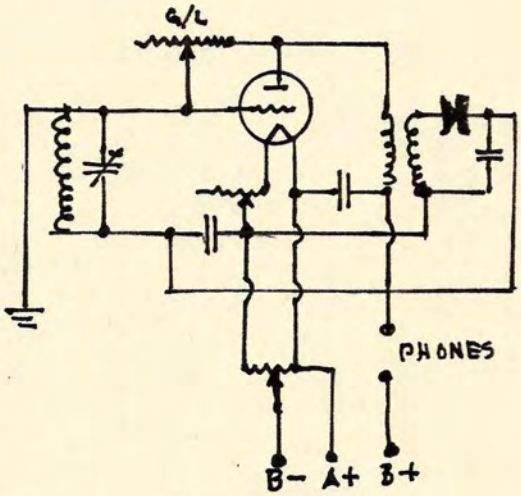

REFLEX CIRCUIT

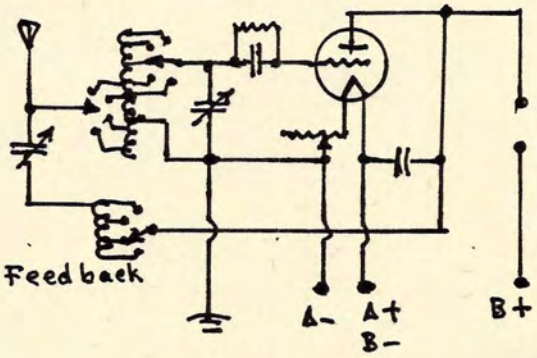

REINARTZ REGENERATIVE

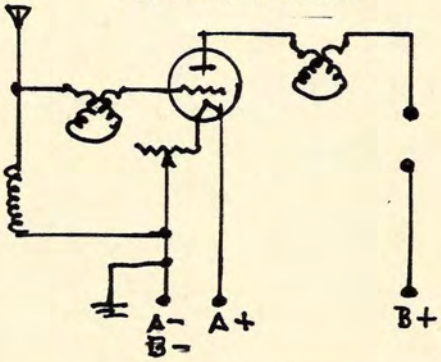

AUTOPLEX CIRCUIT

THE CLASSIC CIRCUITS

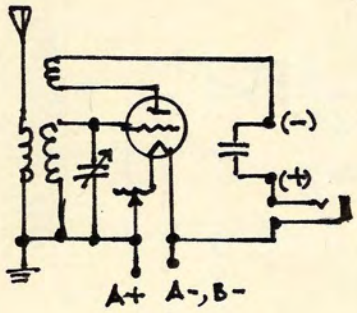

REGENERATOR

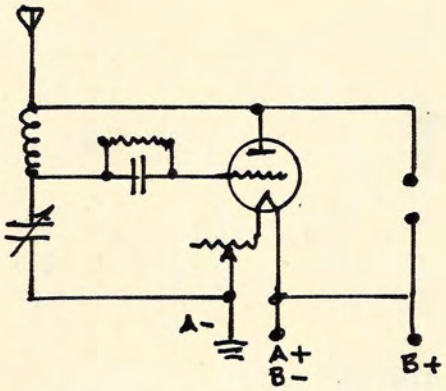

ULTRA-AUDION - 1912

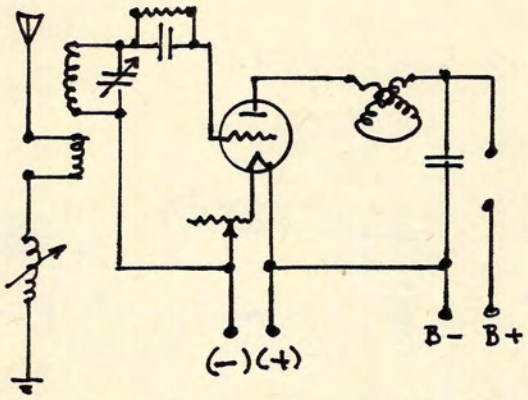

ARMSTRONG-GODLEY TUNED PLATE

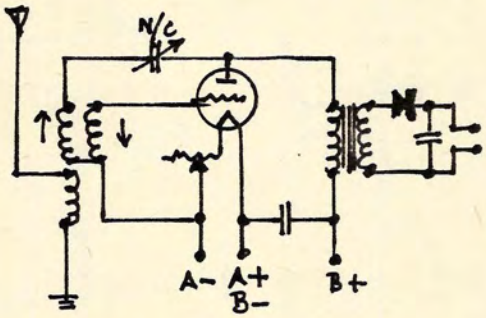

RICE NEUTRALISED CIRCUIT

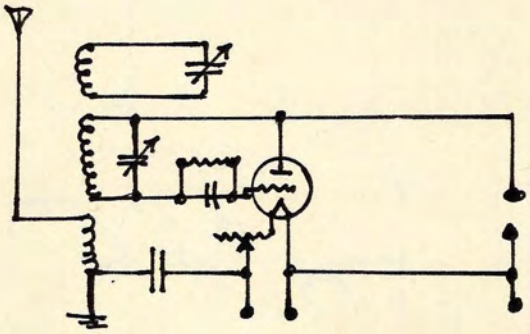

AUSTIN "ABSORBER" CIRCUIT

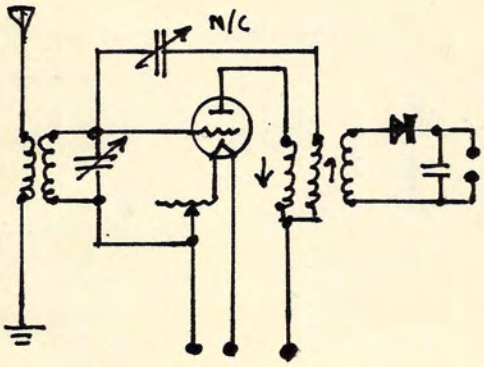

HAZELTINE-JONES NEUTRALIZER

THE CLASSIC CIRCUITS

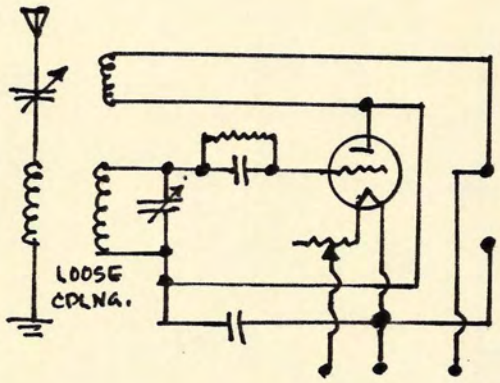

FLEWELLING CIRCUIT - 1922

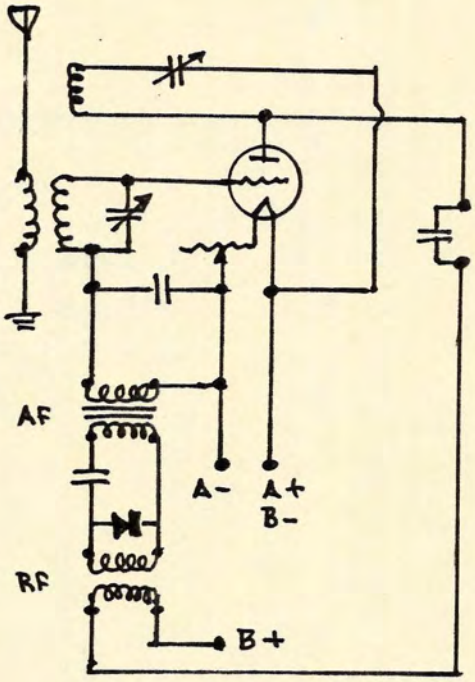

LATOUR REFLEX (French)

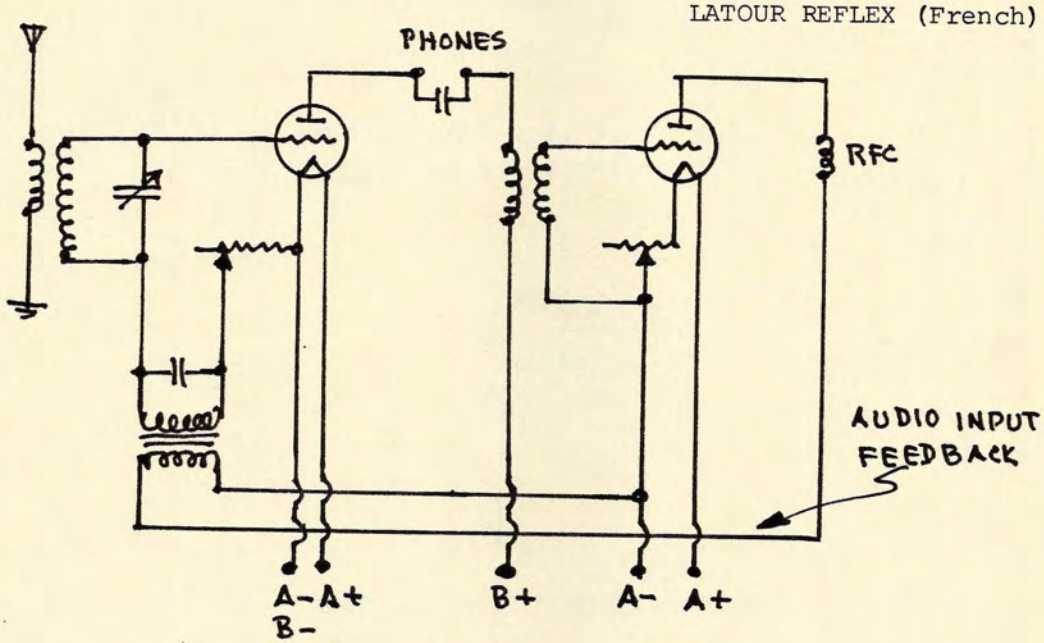

LATOUR REFLEX (French)

THE CLASSIC CIRCUITS

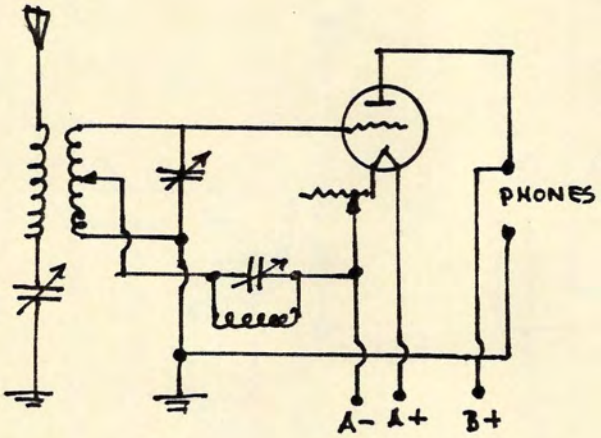

ARMSTRONG-HULBERT
SUPER-REGENERATIVE

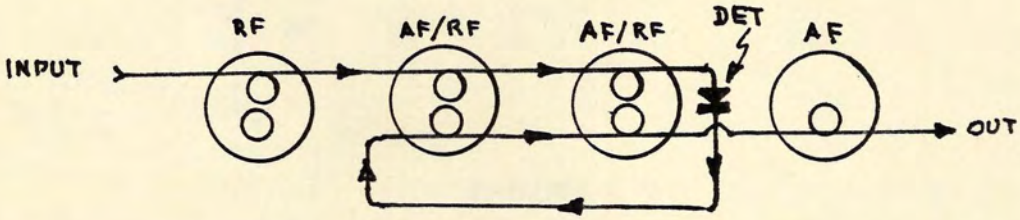

THE REFLEX PRINCIPLE, SUCH AS USED BY PRIESS, SQUIRE, ACME, ERLA, etc.

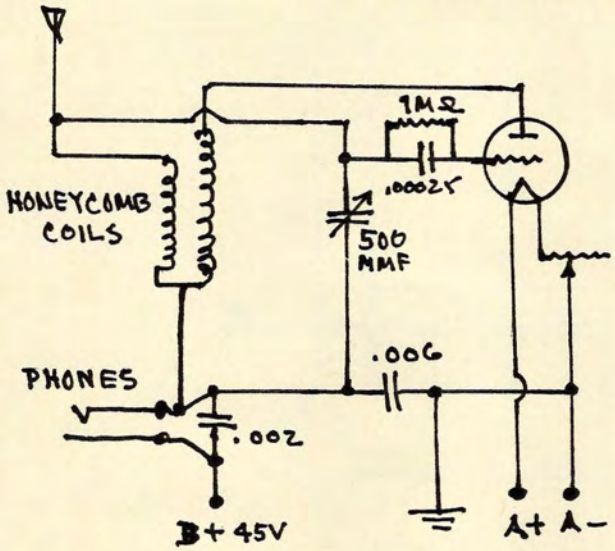

FLEWELLING CIRCUIT - 1923

THE "DOUGHNUT" RECEIVER OF 1910

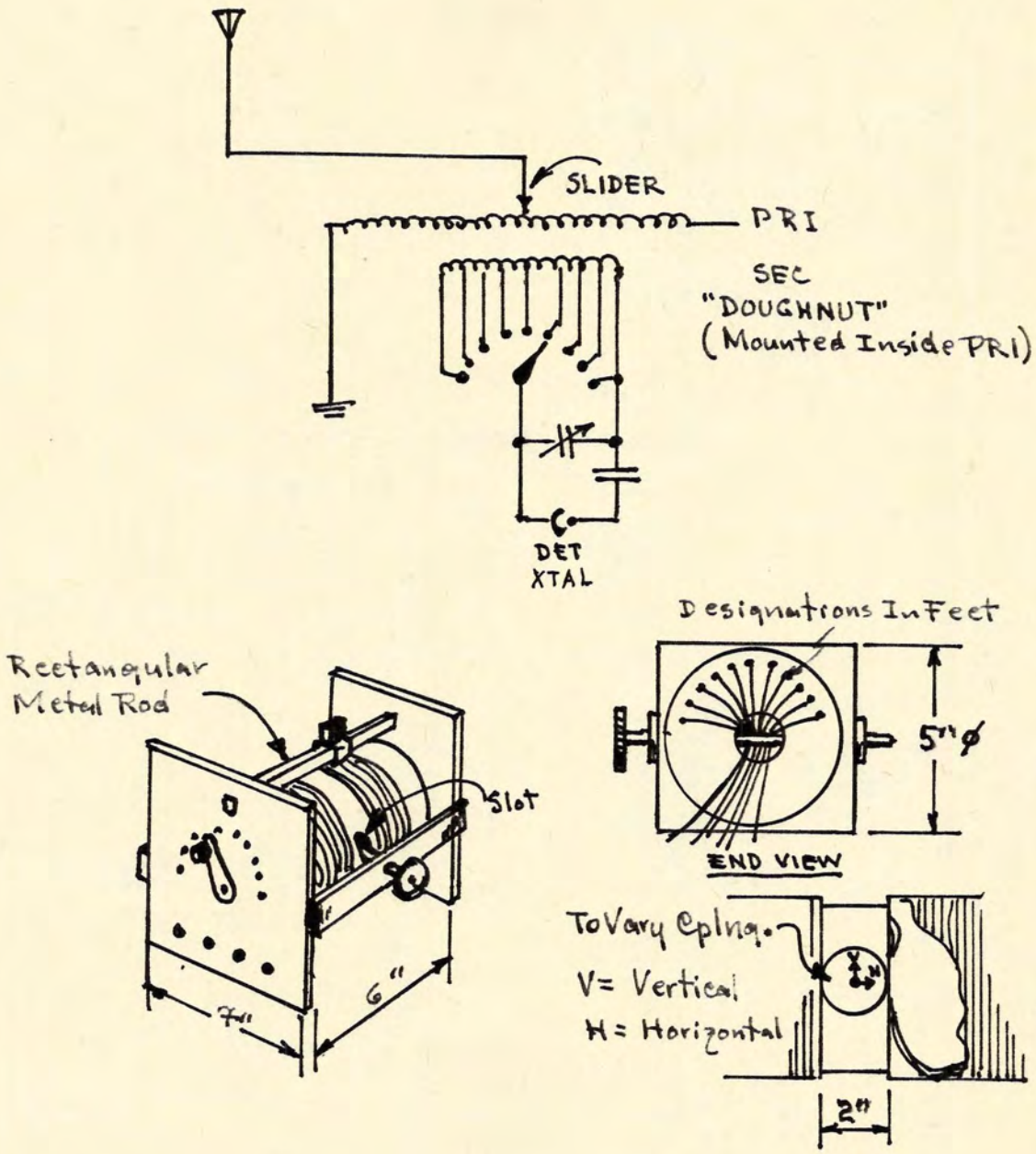

PRI = #22 Copper Wire; SEC = #28.

NOTE:

This was a German Tuner, Used By Marconi.

DeFOREST QUENCHED GAP XMTR., 1912

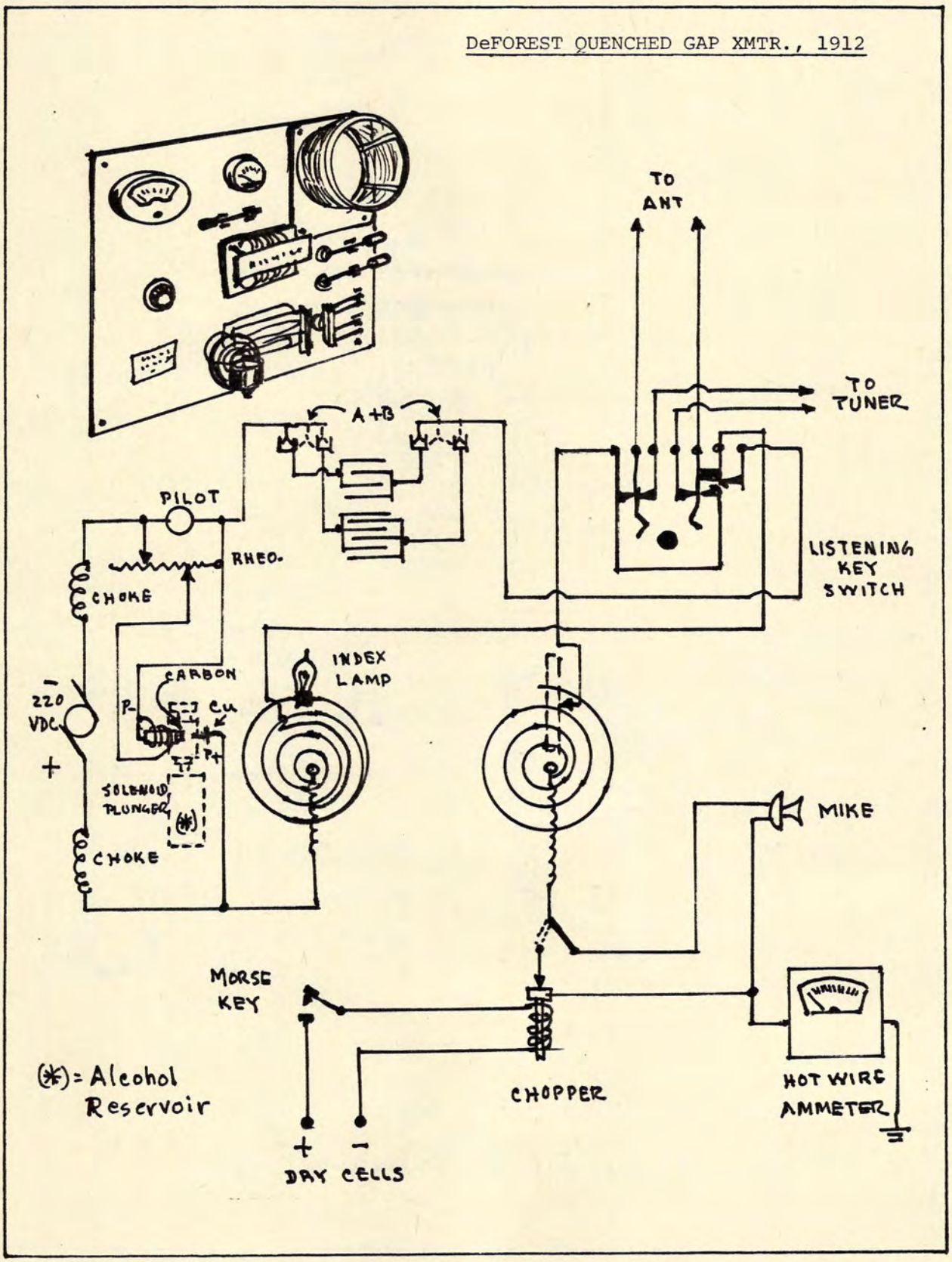

AUSTRALIAN 3-TUBE REVERSED FEED-BACK XMTR.,1919

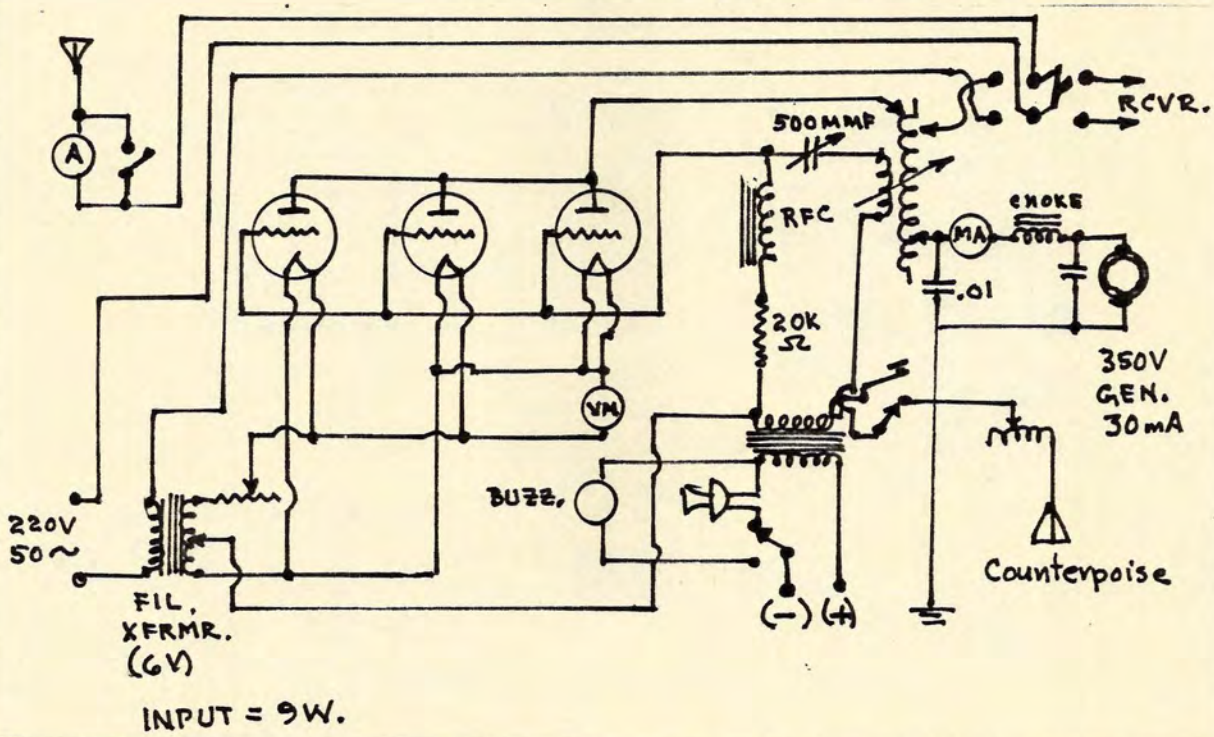

INPUT = 9W.

6-WATT APW TRANSMITTER, 1921

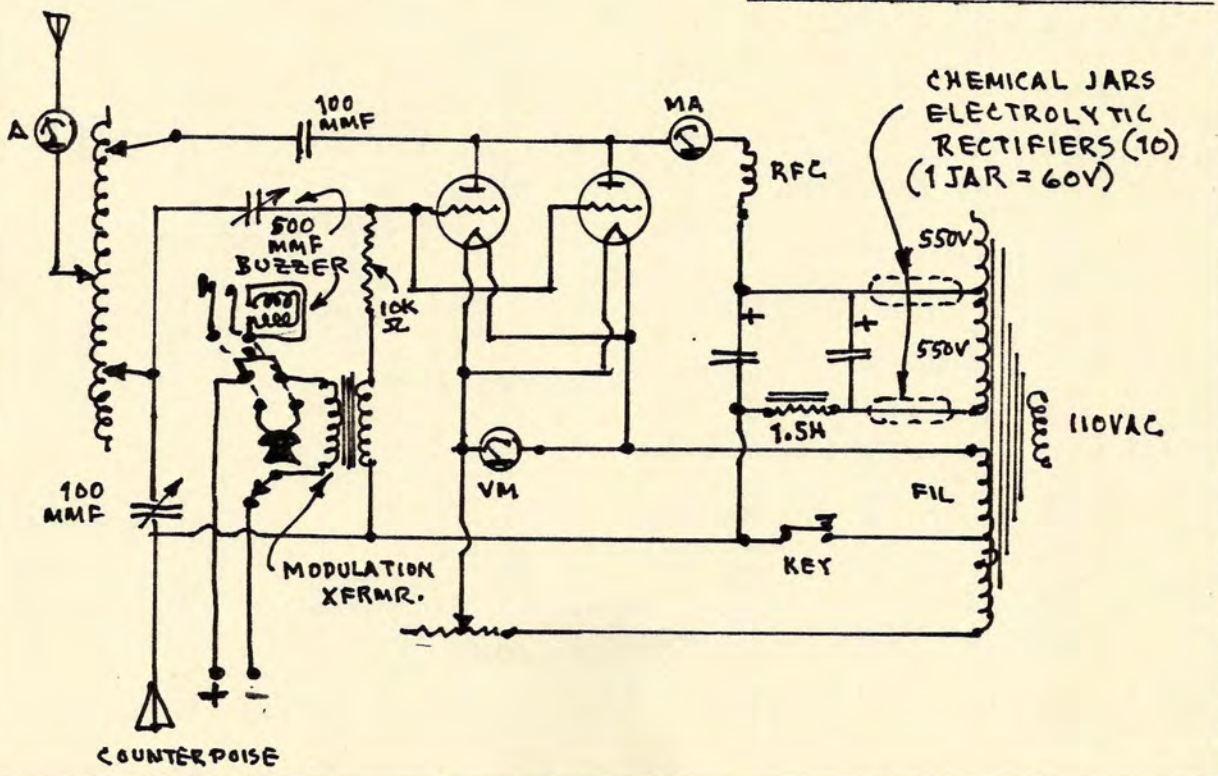

MODULATION TRANSFORMER CONSTRUCTION

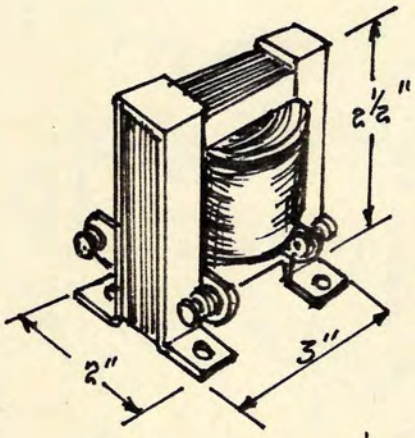

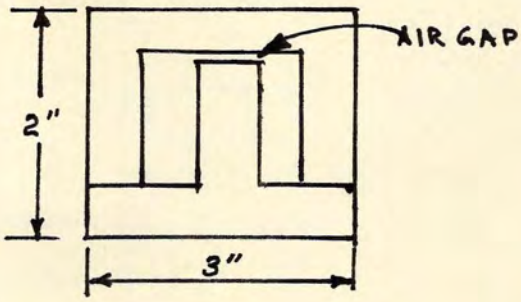

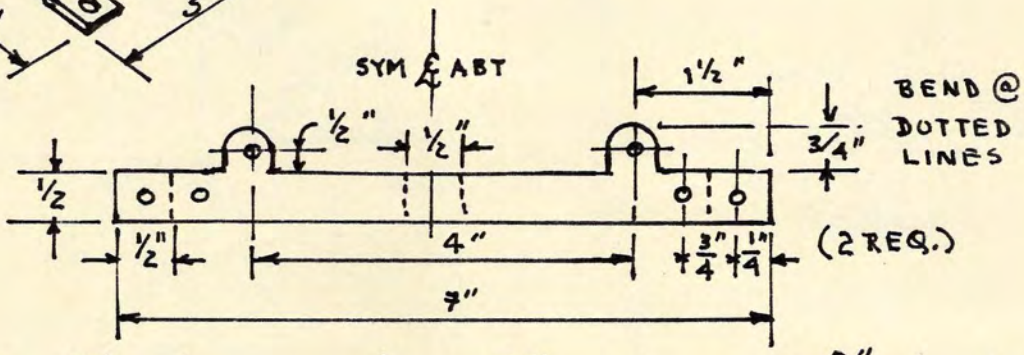

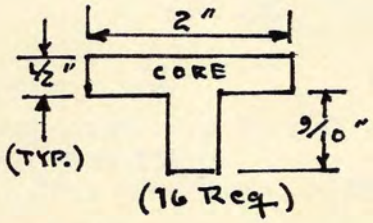

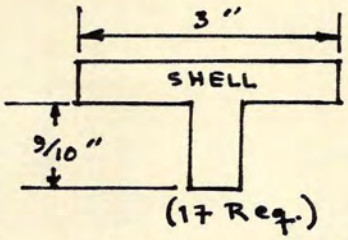

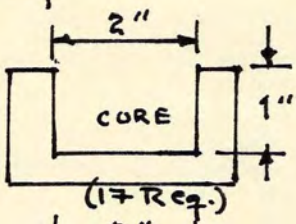

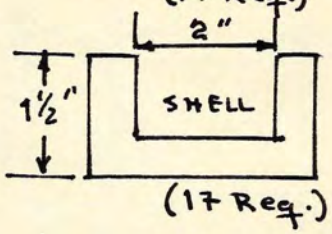

1. 1# № 29 Silicon Xfrmr. Steel.
2. 3 oz. #40 Enamelled Copper Wire.
3. 75 ft. # 30 " " " .
4. 4" # 10 Varnished Spaghetti.
5. 20' Oiled Paper.
6. 8 Mica Washers.
7. 4 Binding Posts.
8. 2 Brass Strips 2" x 8" x 3/32"

Cross-sexional area of magnetic circuit = .25 □".
Varnish all laminations. (1920)

COMMON COIL CONFIGURATIONS OF THE EARLY '20s

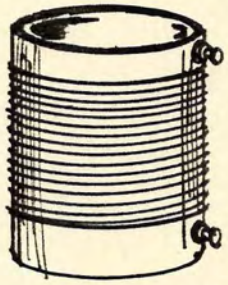

SOLENOID

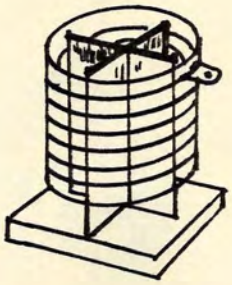

XMTNG. SOLENOID

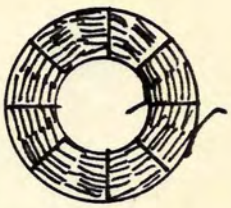

SPIDER-WEB

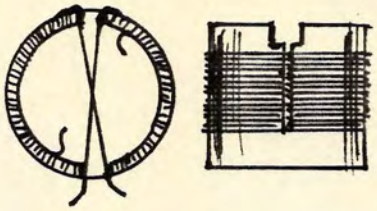

"D" COIL
(Ellis, Acme, Celco, etc.)

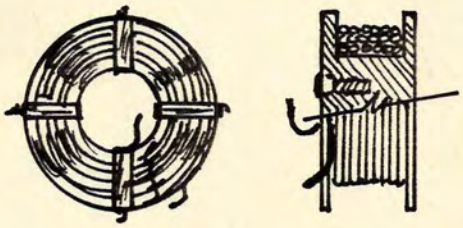

SELF-SUPPORTING

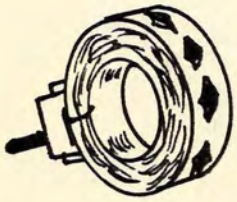

HONEY-COMB/DUO-LATERAL/COTO/REMLER, etc.

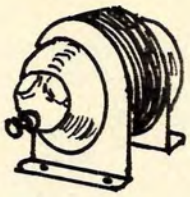

TYPICAL REACTANCE COIL
(G.E., RCA, etc.)

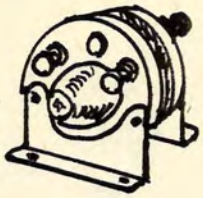

TYPICAL RF XFRMR.
(RCA)

For constructional data for all these coils, see other pages.

EARLY COIL CONFIGURATIONS

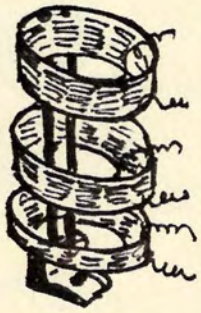

"SUPER-COUPLER"
E.M. Clark - ('25-$5)

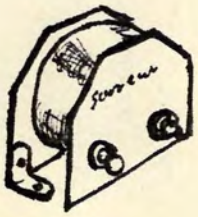

RF COIL
Clark
('25-$8)

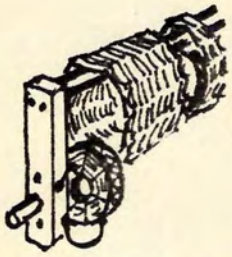

"SUPERCOIL"
Perfection Radio
('24-$7)

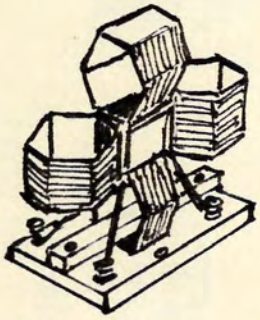

"QUADRAFORMER"
Gearhart-Schlueter
('25-$8)

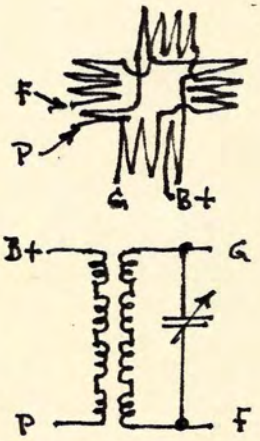

"QUADRAFORMER"
SYMBOLS

RF COILS
KELLOGG
('24-$2.35)

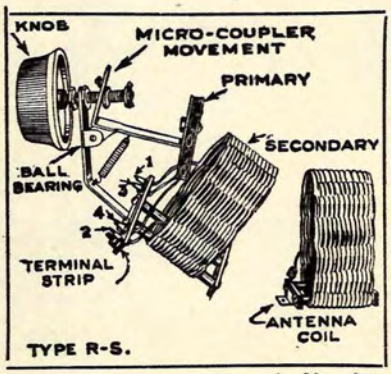

EARLY PANEL CONFIGURATIONS

MID-WEST (MIRACO); 150 - 600 METERS; $18:

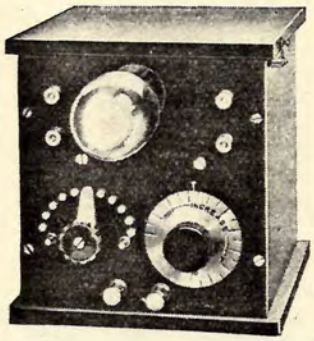

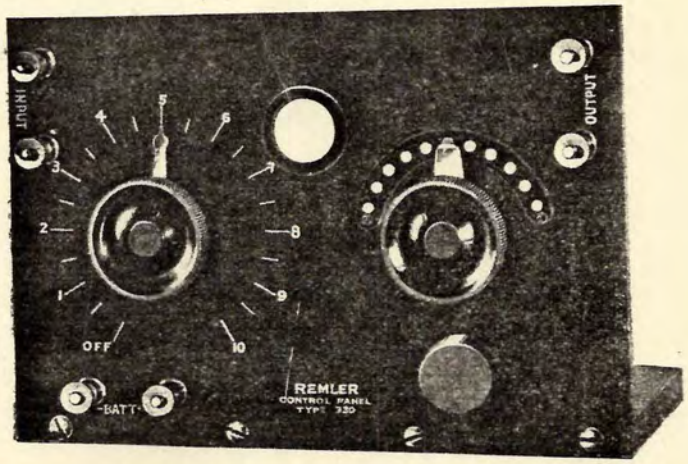

REMLER 330 DETECTOR PANEL
5" x 7½" (A Xtal. Detector.)
REMLER 93 POT.
" 92 SOCKET ($8 SET)
" 810 RHEOSTAT
(Used w/ REMLER AMP. PANELS
330, 331, 332.)

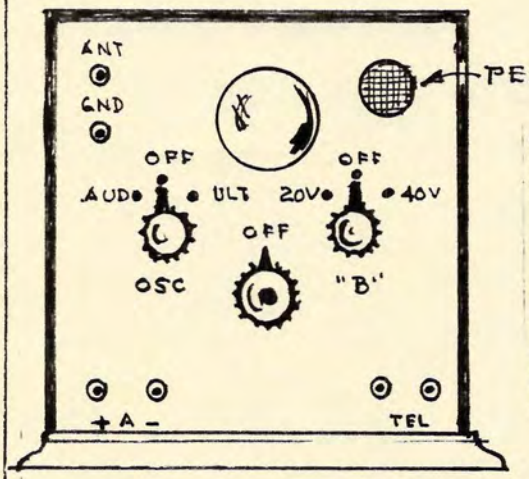

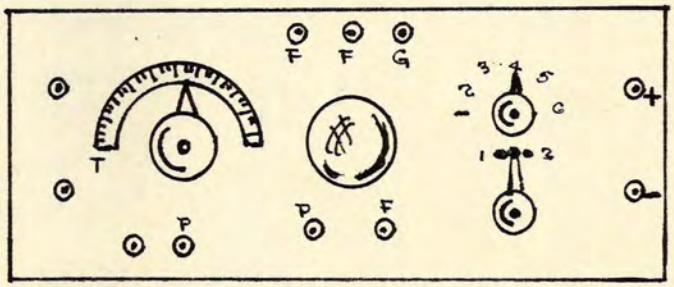

ARNOLD AUDION CONTROL PANEL
1919 - $20 (6"x6"x12")

De FOREST AUDION-ULTRA-
AUDION PANEL - 1919 - $24
Type P-500

A DAMPED-UNDAMPED RECEIVER, 1919

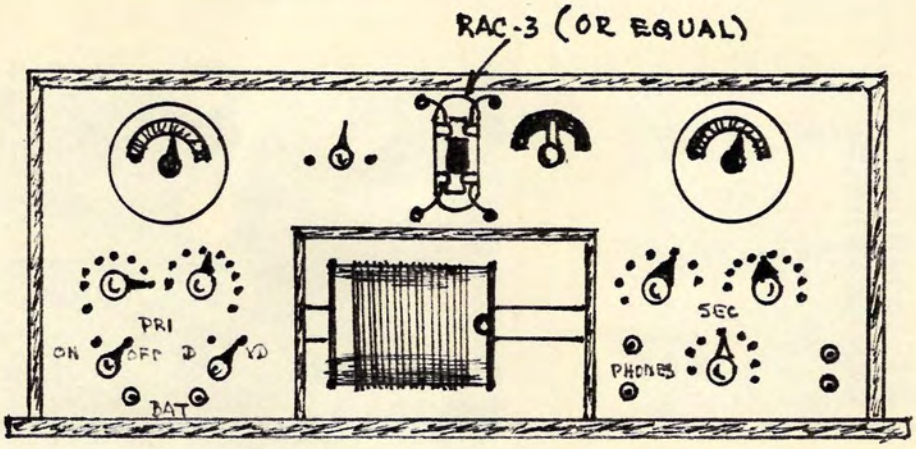

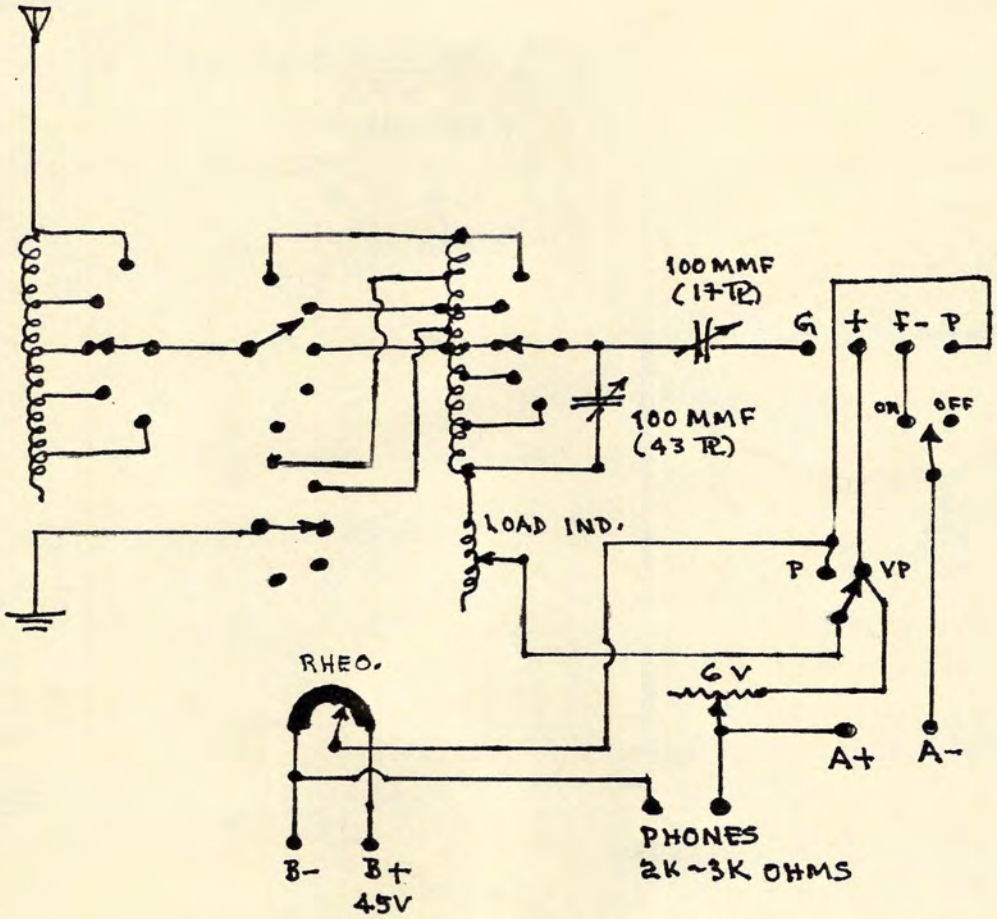

FEDERAL REGENERATIVE w/ 3-STAGE AF, 1919

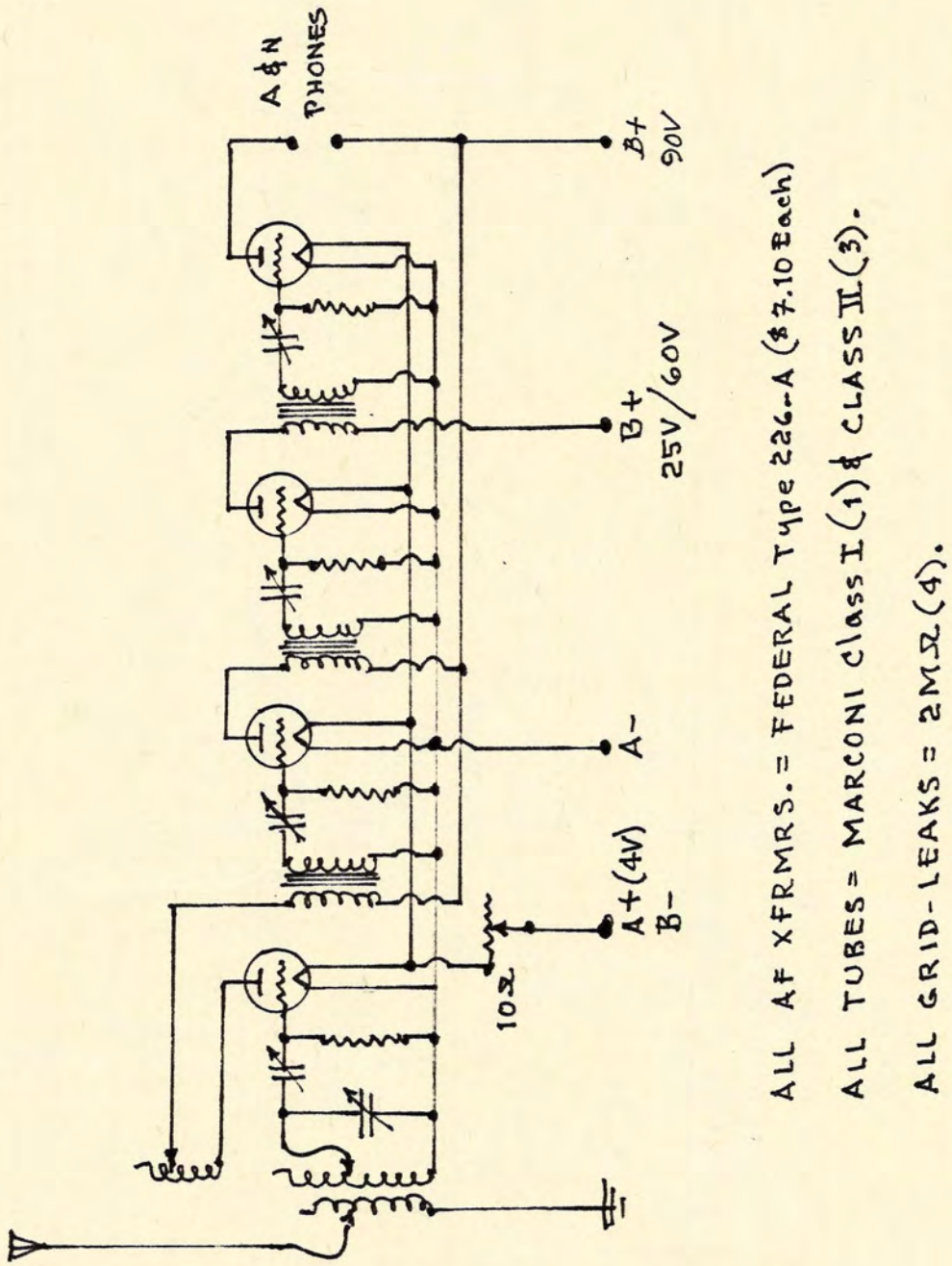

(RAM 11-19)

U.S.NAVY 170-25,000 METERS RCVR., 1919

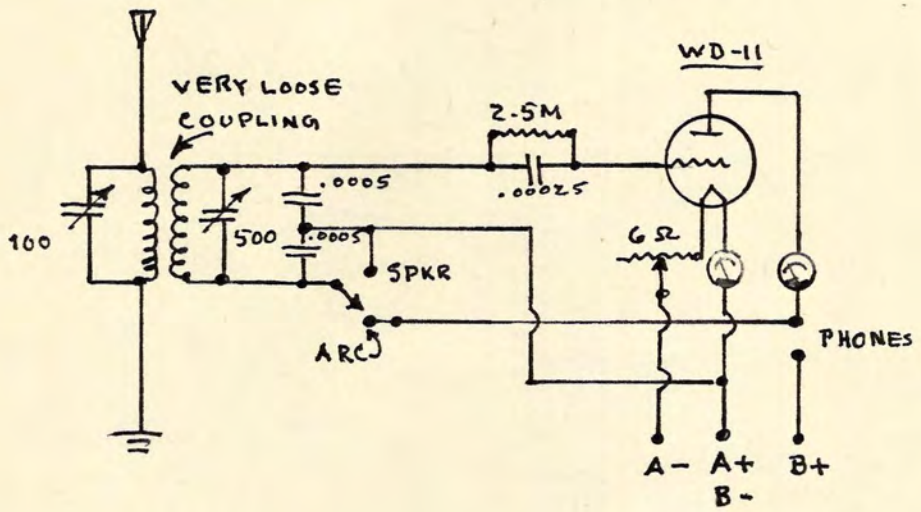

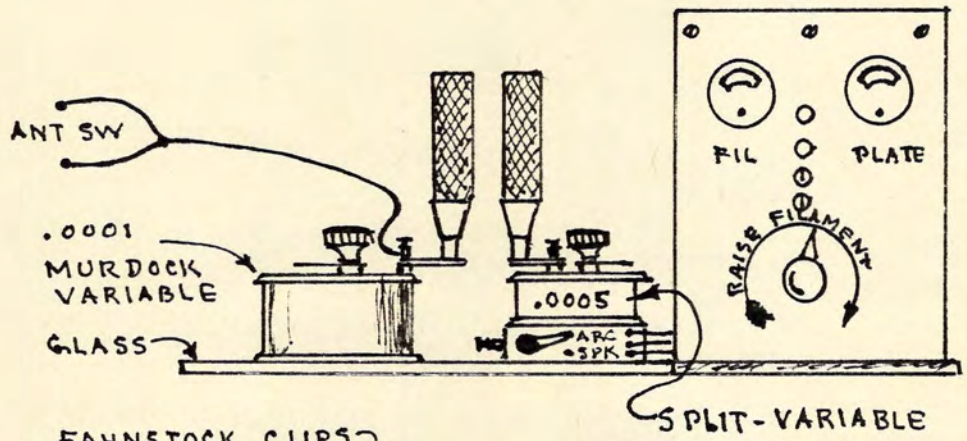

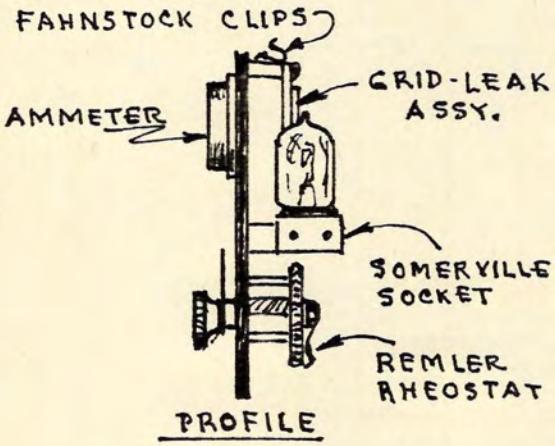

WESTON 301 METERS.
COLBURN COIL ADAPTERS.
REMLER/COTA COILS.

(RAN 11-19)

WESTINGHOUSE SINGLE-CIRCUIT TUNER, 1921
(Armstrong Regenerative)

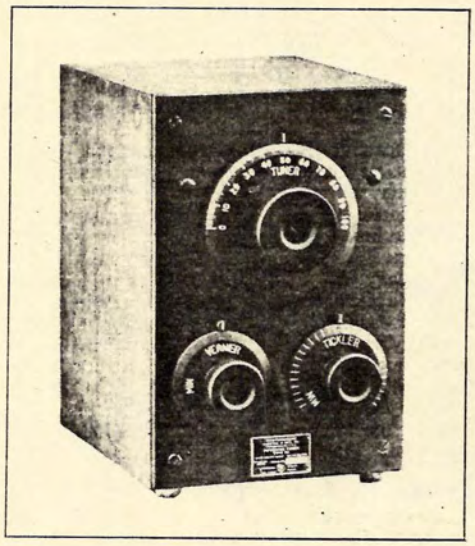

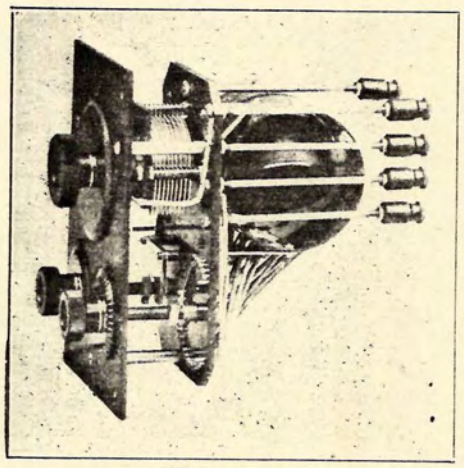

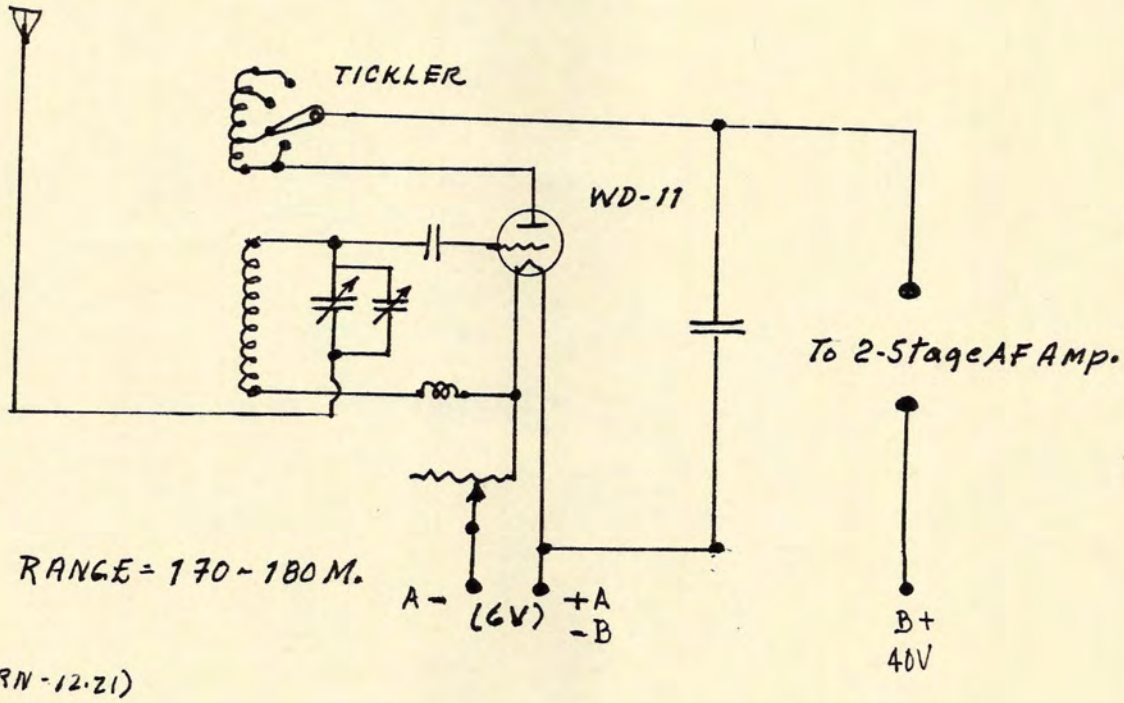

POCKET CRYSTAL RADIO, 1921

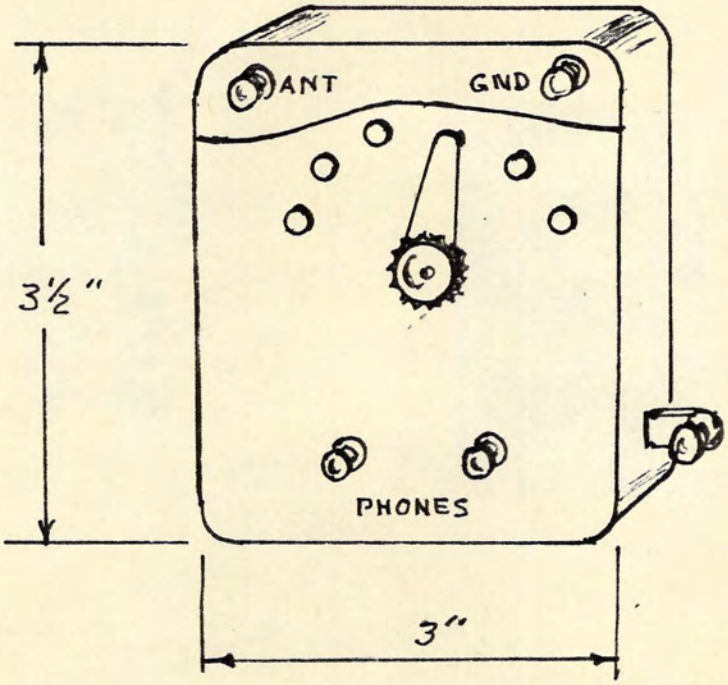

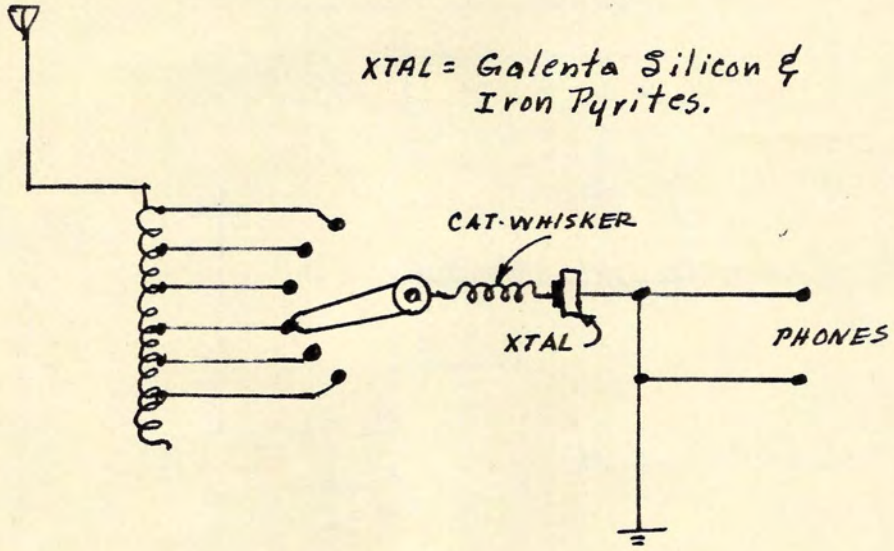

GREBE CONFIGURATIONS
(1921 - 1922)

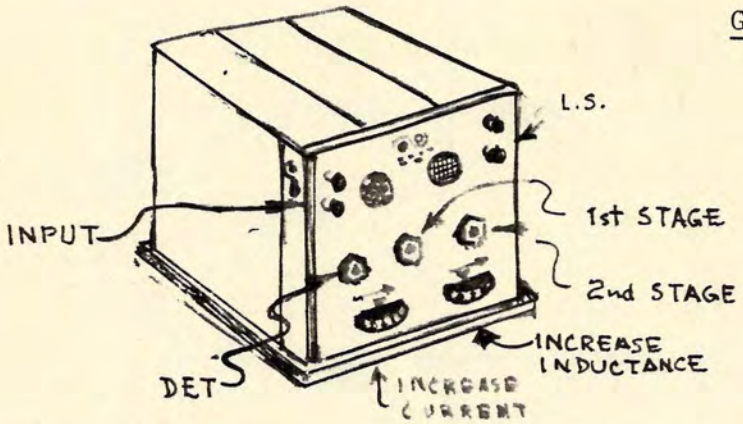

GREBE 2-STAGE AMPLIFIER
(1921 - $55)

GREBE CR-8 RECEIVER; 1921; REGENERATIVE: - 150/1000 Meters

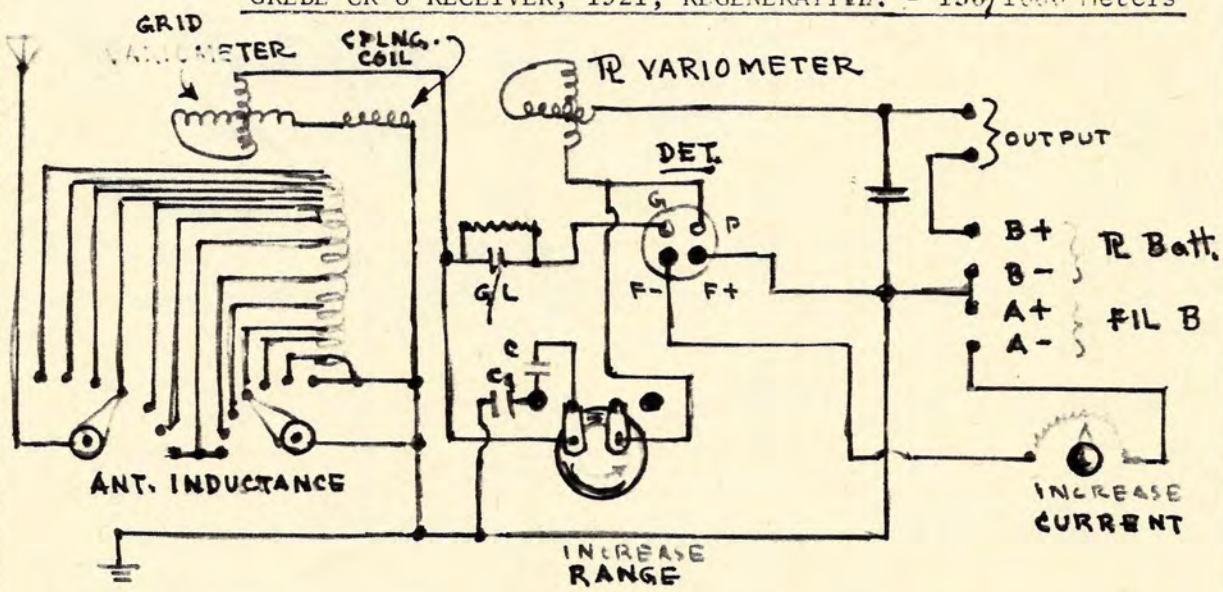

GREBE SINGLE-CIRCUIT REGENERATIVE; CR-5; 1922

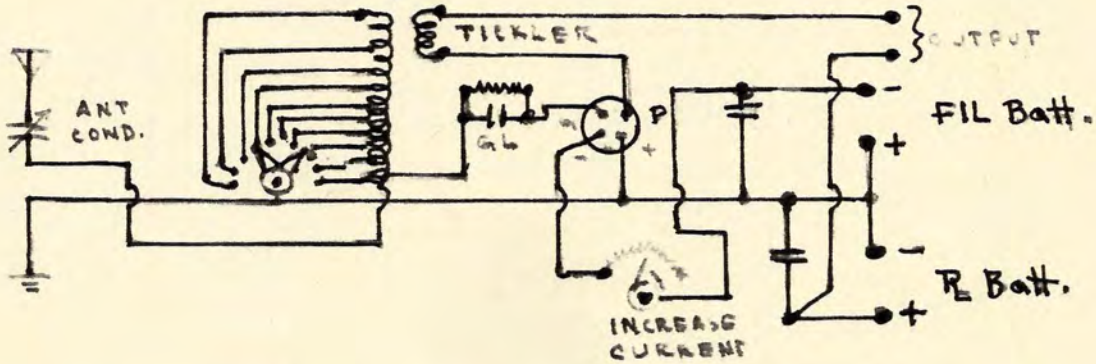

GREBE TRANSCEIVER KT-1, 1921

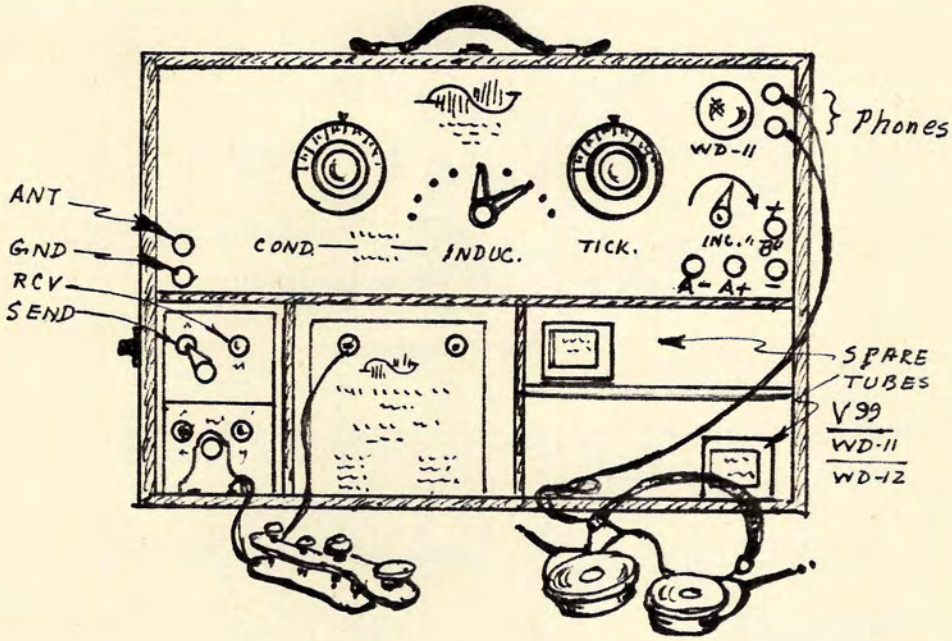

Supplied originally w/ the GREBE "Radio Kite", an aerial wire raised aloft by a parchment & balsa-wood kite to 50'. Original cost = $175.

Chassis was the GREBE CR-5: see below.

Outfit consisted of CR-5, xmtr., tube, batteries & head-set (phones). Weight = 24#.

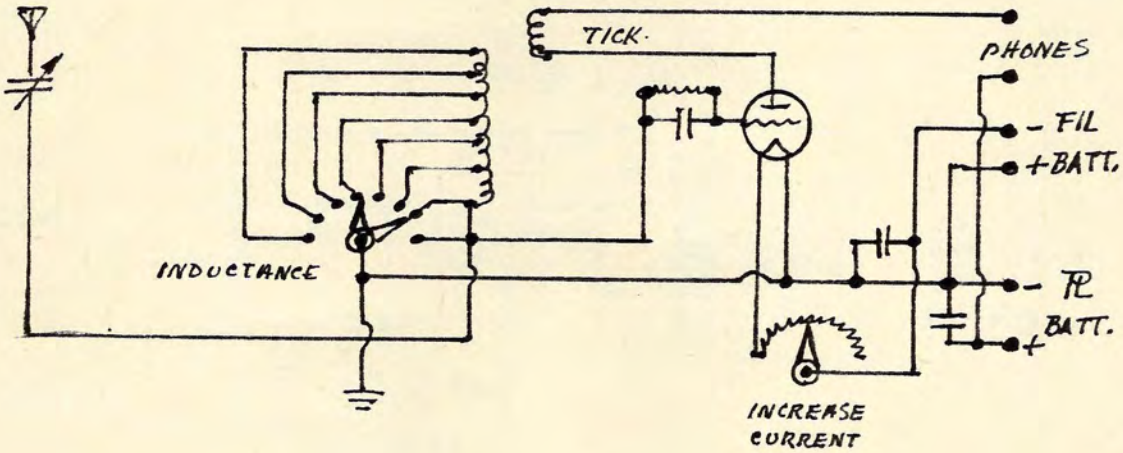

CONVERTING THE GREBE CR-5 TO A 3-CIRCUIT TUNER, 1922; Sht. 1

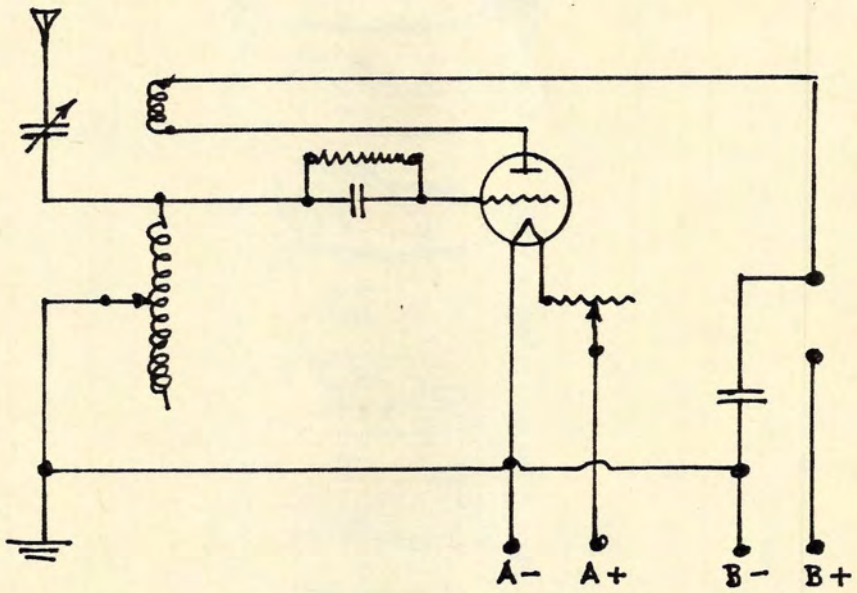

SINGLE-CIRCUIT CR-5 TUNER

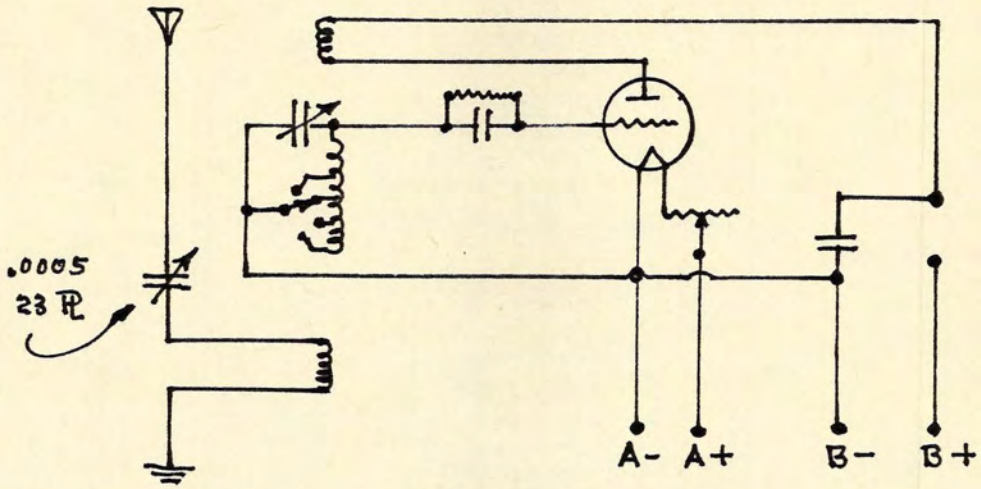

3-CIRCUIT CR-5 TUNER

(R 6-23)

CONVERTING THE GREBE CR-5 TO A 3-CIRCUIT TUNER, 1922; Sht. 2

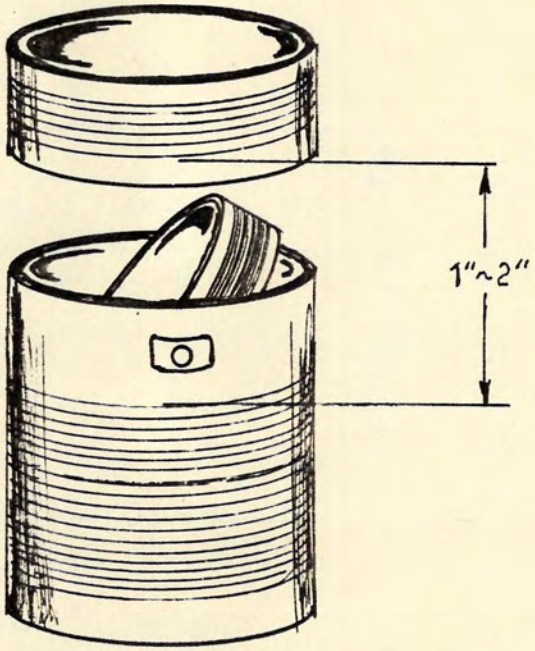

4"Ø Coil Form, #?? SCC Wire, Tapt @ 40, 50, and 60 Turns.

196 to 500 Meters

INSTRUCTIONS:

1. Remove ANT and GND wires.
2. Jumper ANT and GND binding posts.
3. Do not alter any other wiring.
4. Connect ANT and GND to new coil.
5. Place new coil in inductive relationship with the stationary winding of the coupler, with spacing of 1" to 2", whichever works out as best.

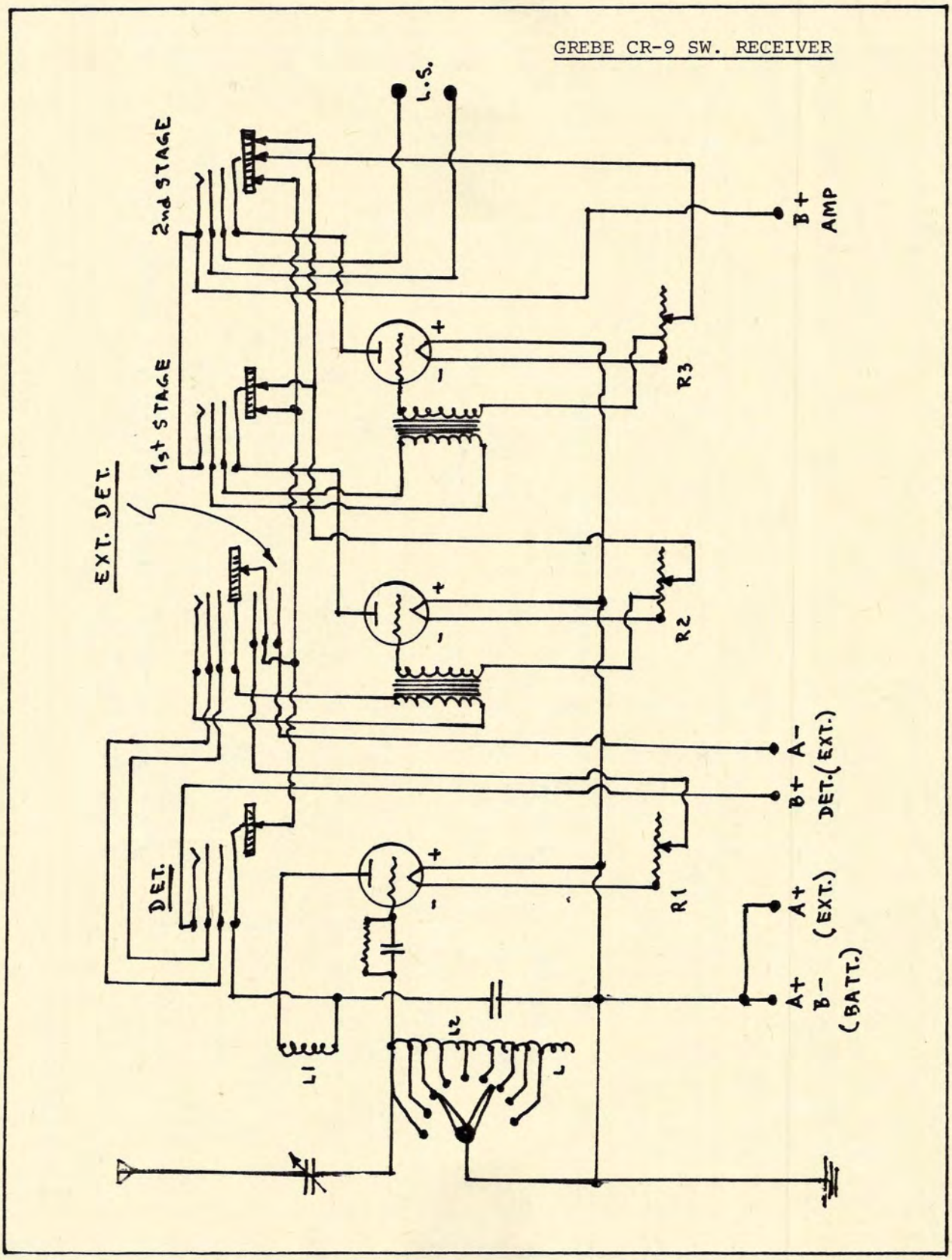
GREBE CR-9 SW. RECEIVER
L.S.
2nd STAGE
1st STAGE
EXT. DET.
DET.
B+
AMP
R3
R2
R1
A-
B+ DET.(EXT.)
A+
(EXT.)
A+
B-
(BATT.)
L1
L2
L3

GREBE CR-12 REGENERATIVE SET, 1923

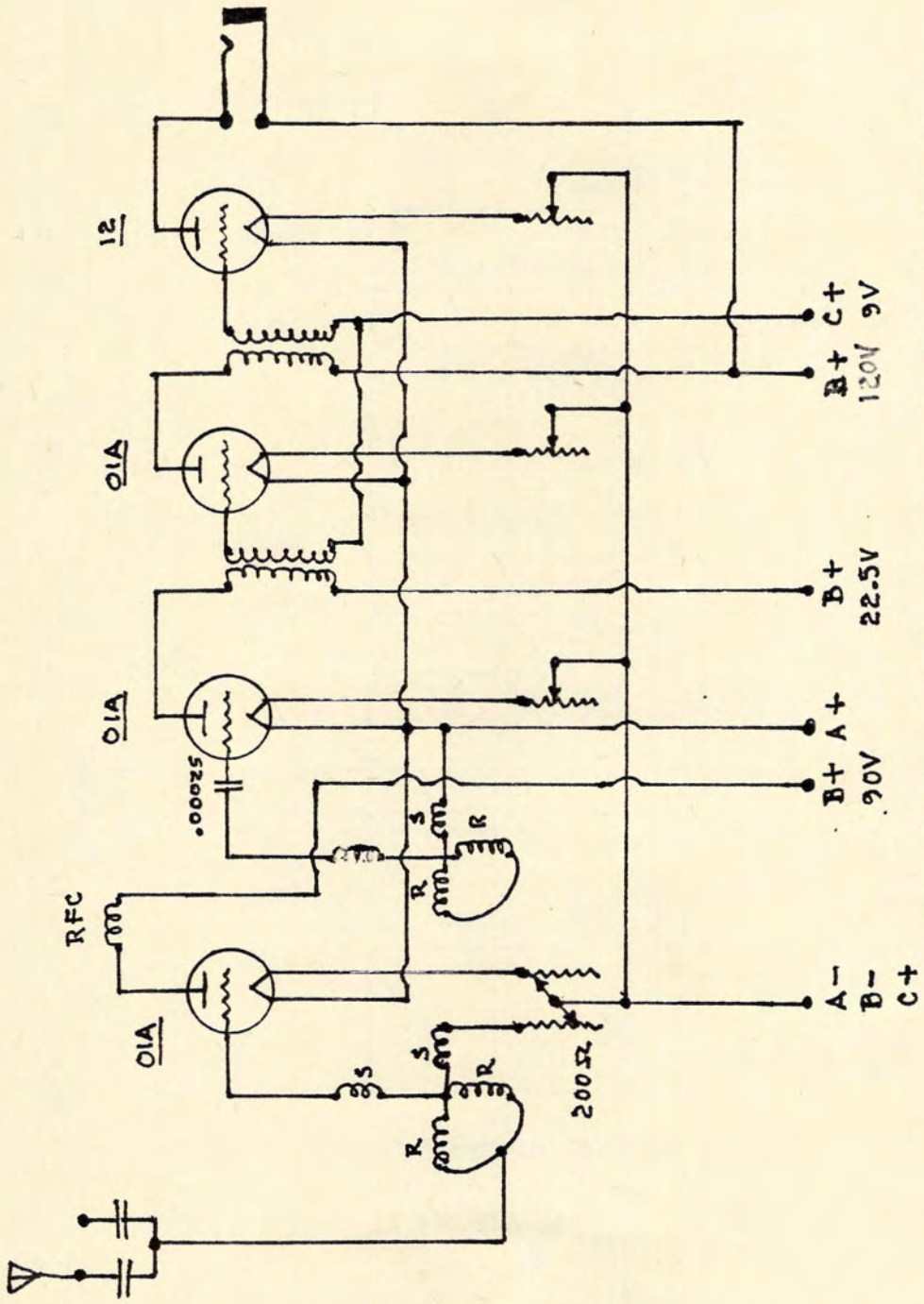

GREBE CR-13, 1922 SW. Receiver

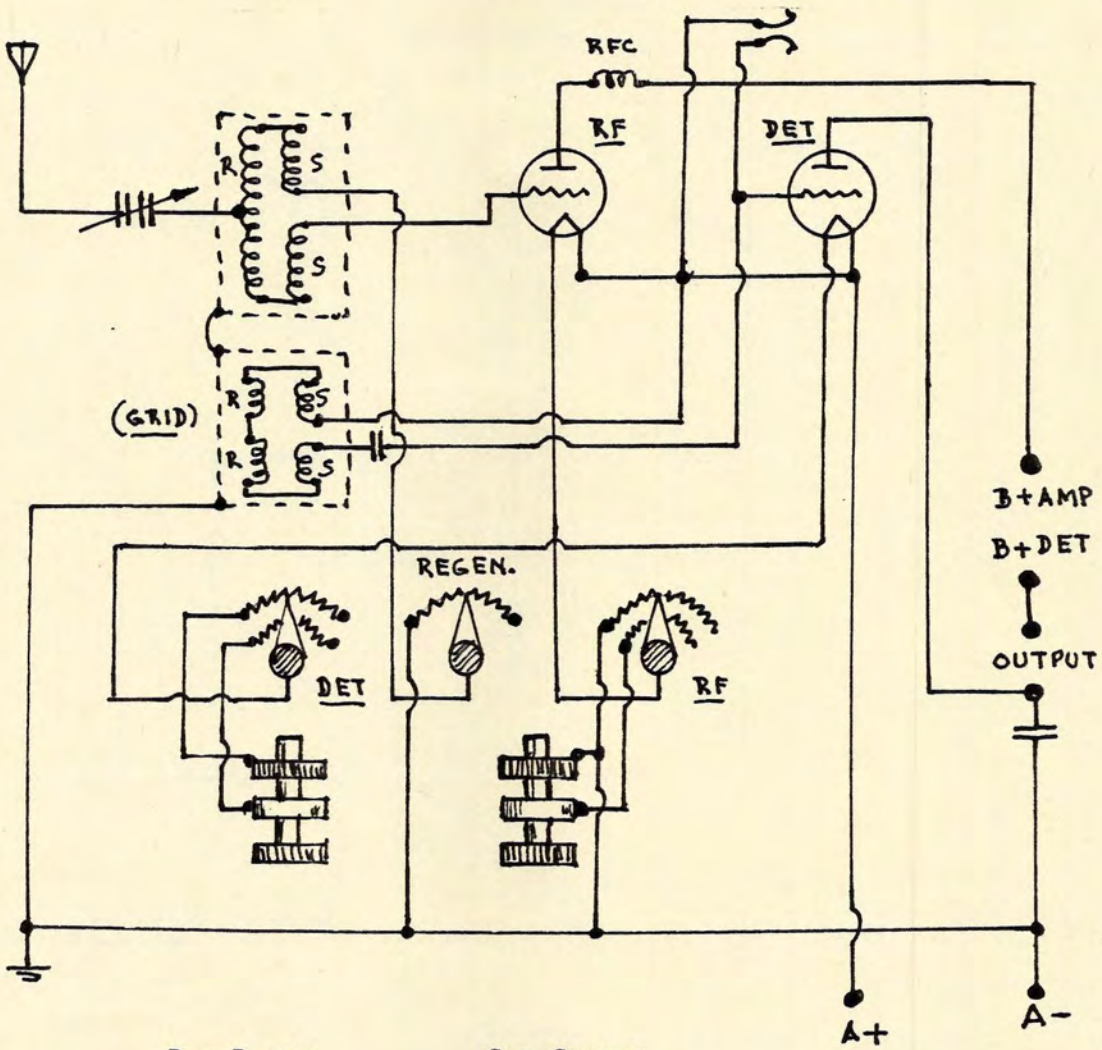

R = Rotor S = Stator

NOTES:
1. Variometers were not of a standard type.
2. Total number of Variometer turns = 78; 19 turns in each half of Stator and rotor; #14 DCC.
3. RFC = 15turns, #26 SC on 4.75" Ø form, mounted on the Stator of the Grid Variometer.
4. Grid Variometer = 92 turns, #16 DCC, 23 turns per half of Stator and Rotor.

GREBE "RORN" AMPLIFIER FOR CR-9

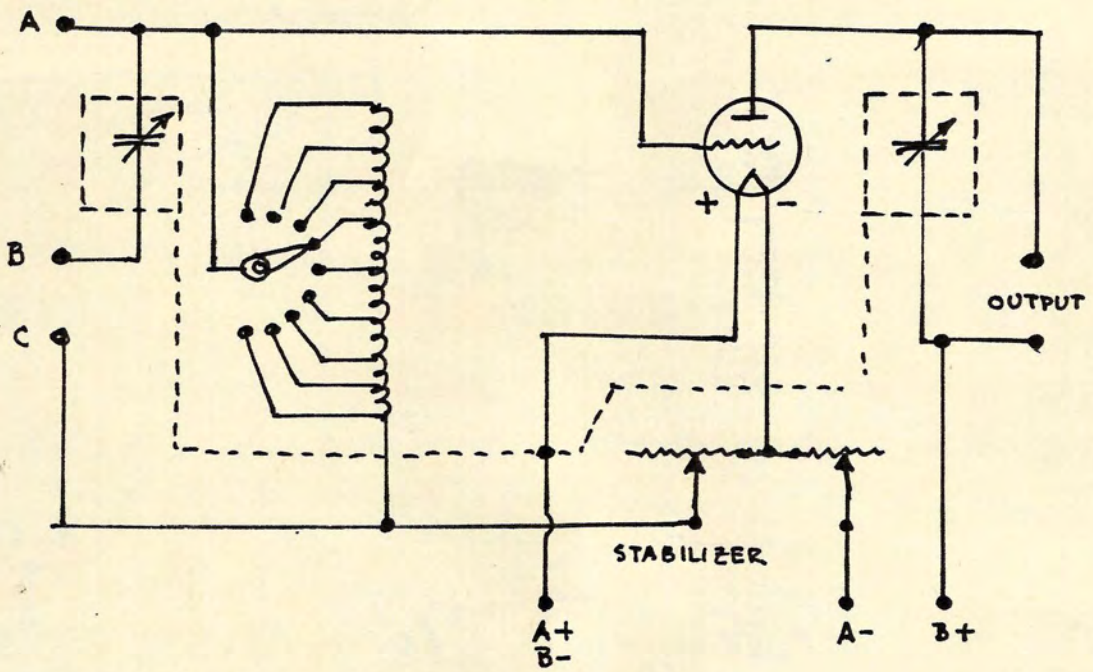

GREBE CR-18 SW RECEIVER

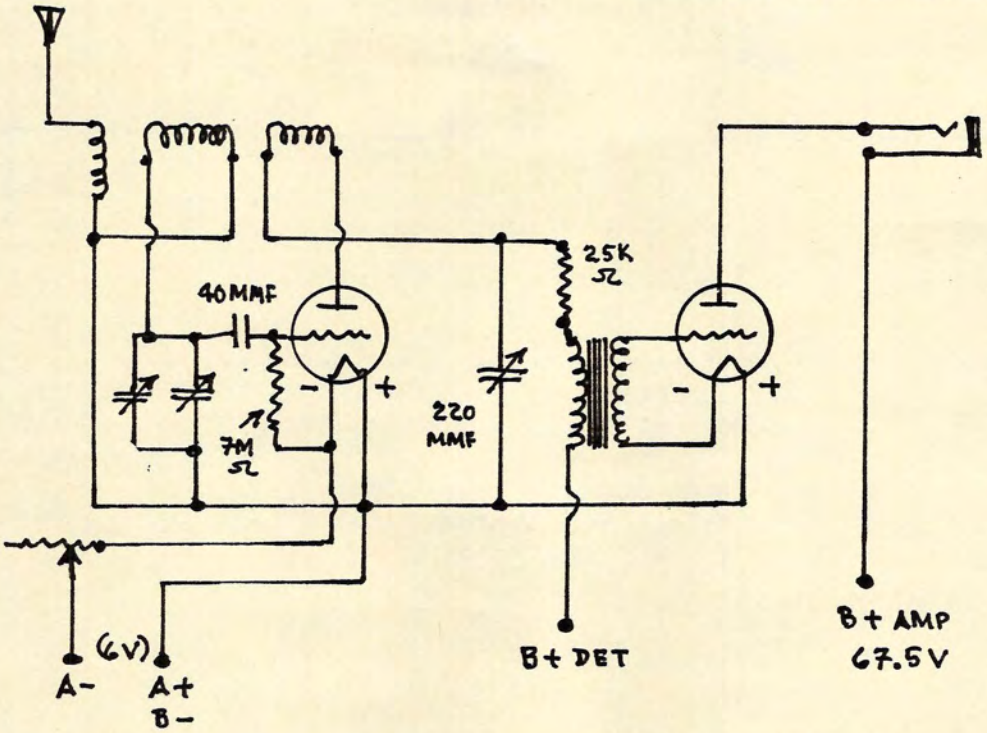

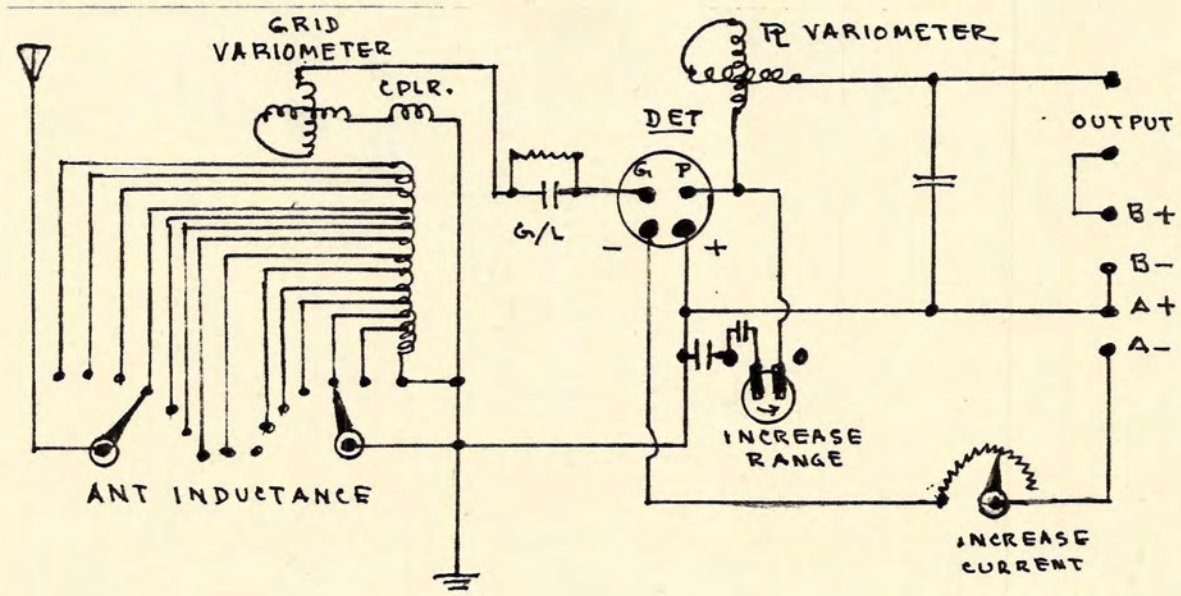

GREBE CR-8 REGENERATIVE, 150-1000 METERS: 1921

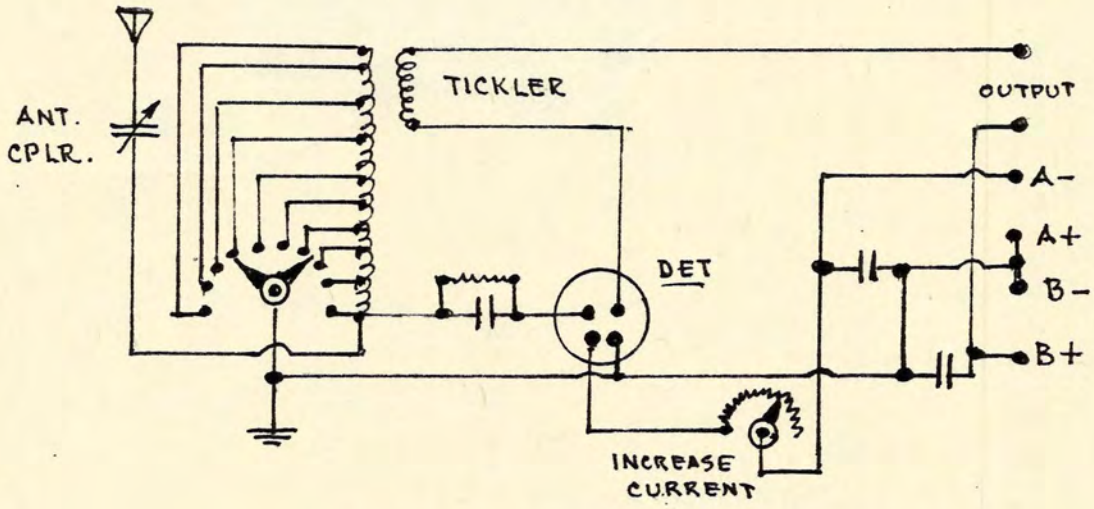

GREBE SINGLE CIRCUIT REGENERATIVE, 1922

MAGNAVOX POWER AMPLIFIER, 1922

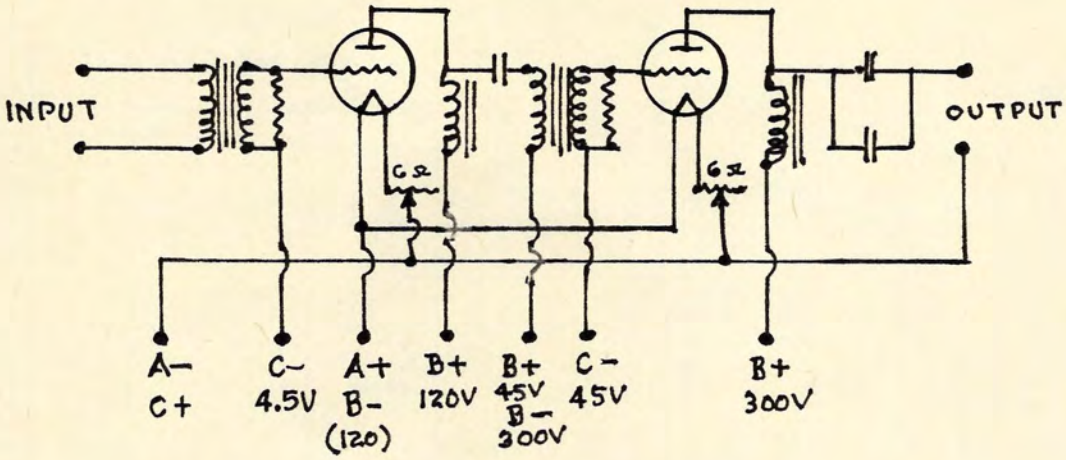

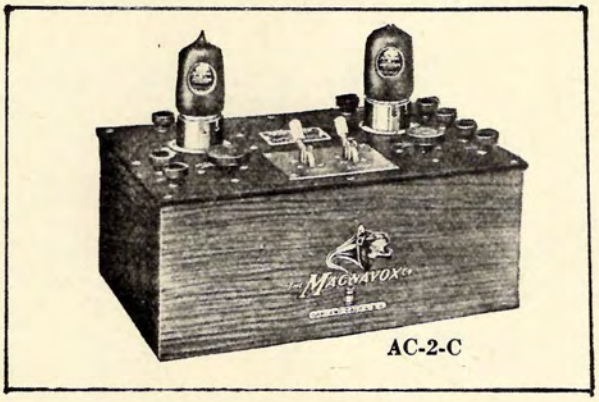

For use with a motor-generator, properly filtered with two chokes and at least 8 mf condensers.

(2) UV-712 AF Transformers (G.E., RCA)

(2) 30H Chokes (Impedance)

(2) 1.5 Megohms Fixed Resistors, 5W.

(2) 2 MF Fixed Condensers.

OUTPUT TUBE = 5-Watt Transmitting Tube.

PARAGON RA-10 3-CIRCUIT TUNER, 1922

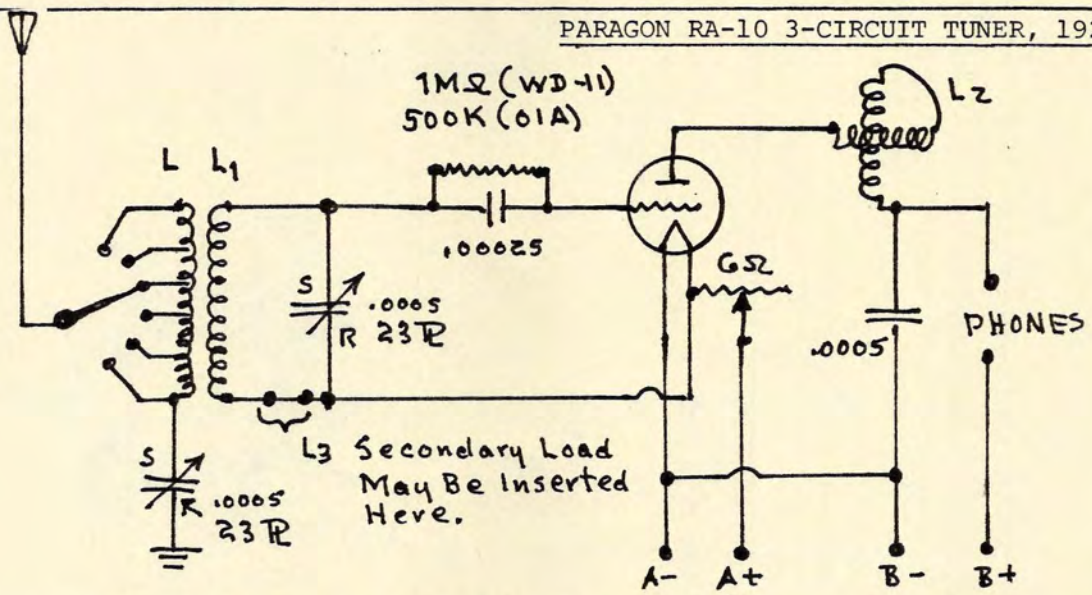

VARIOCOUPLER: L = 60-80 T, #22 SCC, Tapt every 10 T; 4"Ø Form.
L1 = 50-60 T, #26 SCC, Untapt; 3½"Ø Form.

L2 = A small variometer may be used.

(R 7-23)

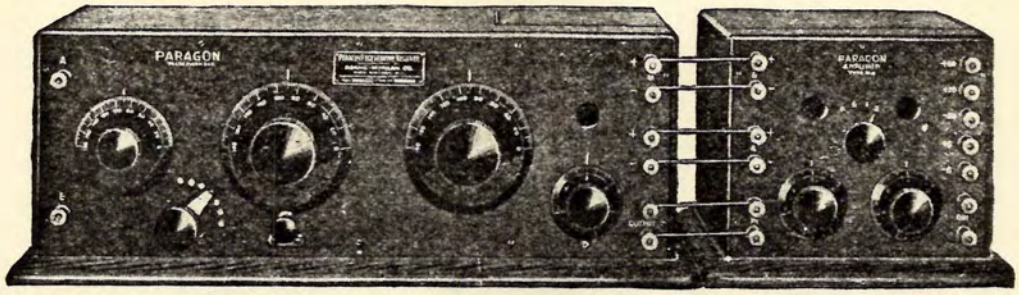

PARAGON R-A-10
(Armstrong Patent ~ R·10·22)
Adam-Morgan Co. R·7·23)
($60)

D-A-2
DET.-AMP.
($40)

AN INEXPENSIVE CRYSTAL SET OF 1922

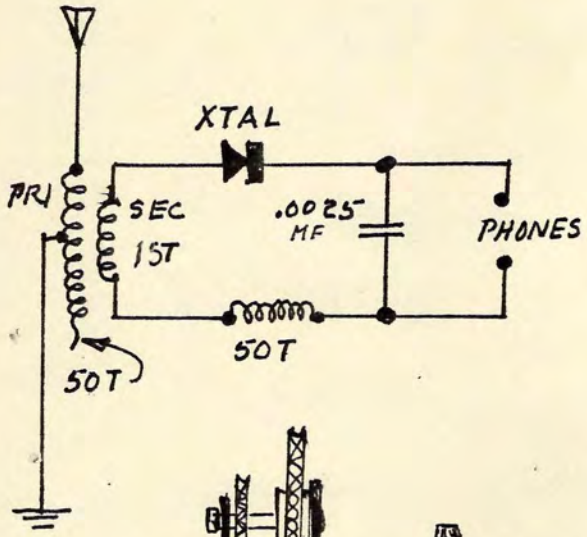

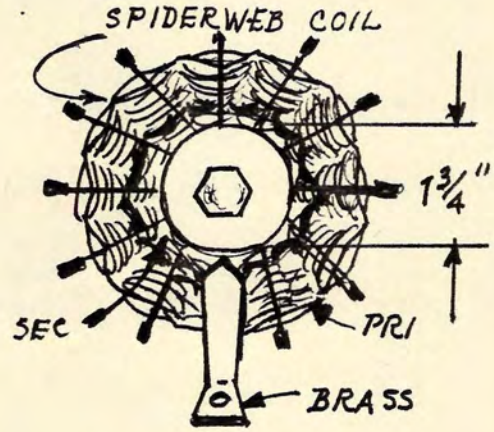

REVOLVING COIL
(TUNER)
(Turned By Fingertips.)

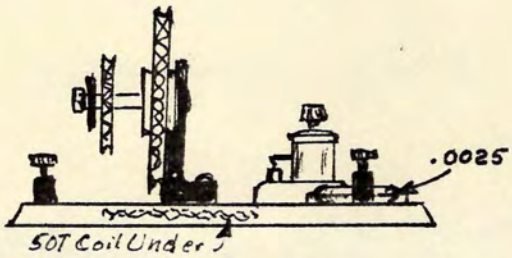

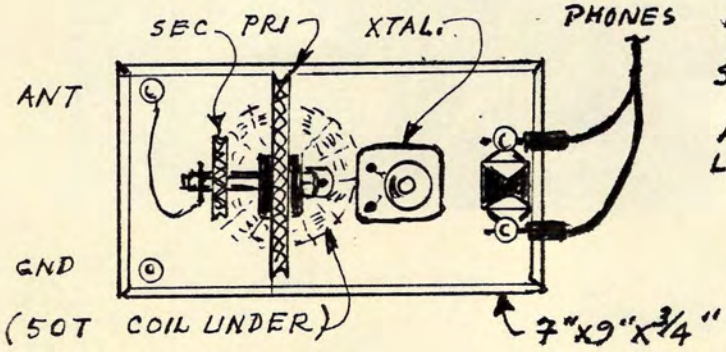

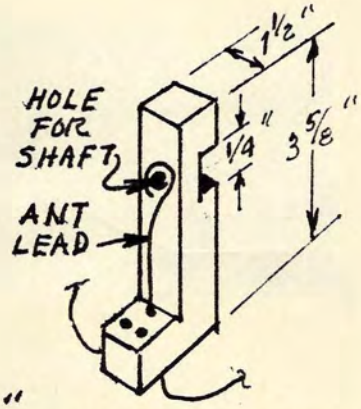

PRI COIL SUPPORT

NOTES: #22 Enamelled Wire All Coils.
Range = 35/40 Miles.

ARMSTRONG's FEED-BACK CIRCUIT

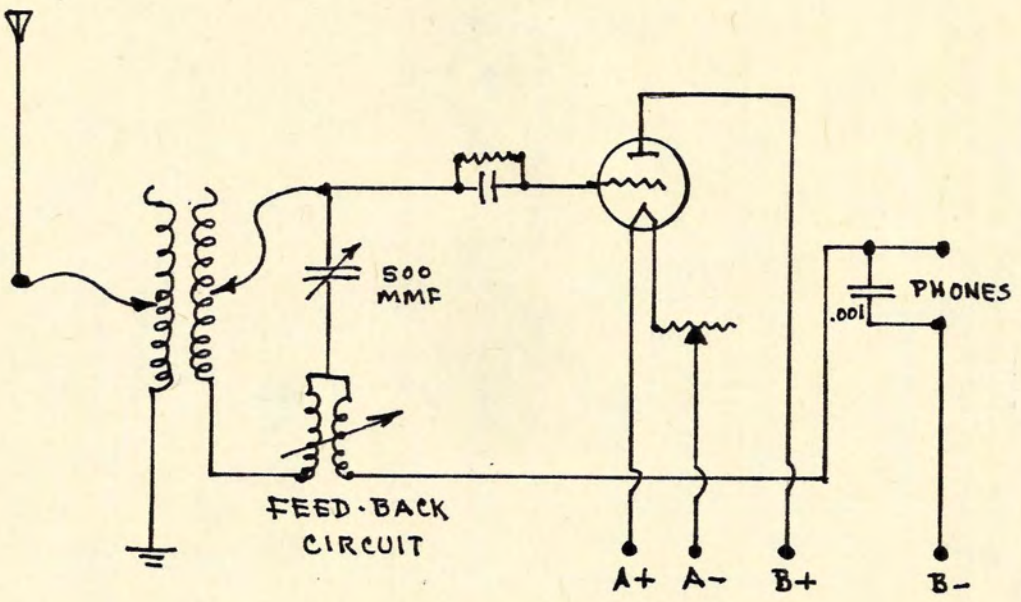

FEED-BACK CIRCUIT WITH LOOSE-COUPLER

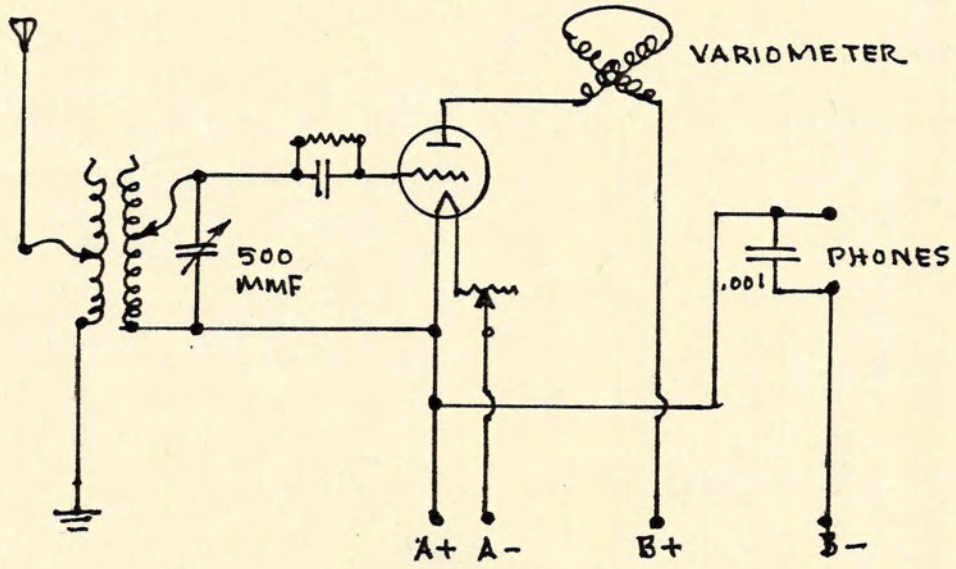

ARMSTRONG SUPER-REGENERATIVE No. 1; 1922

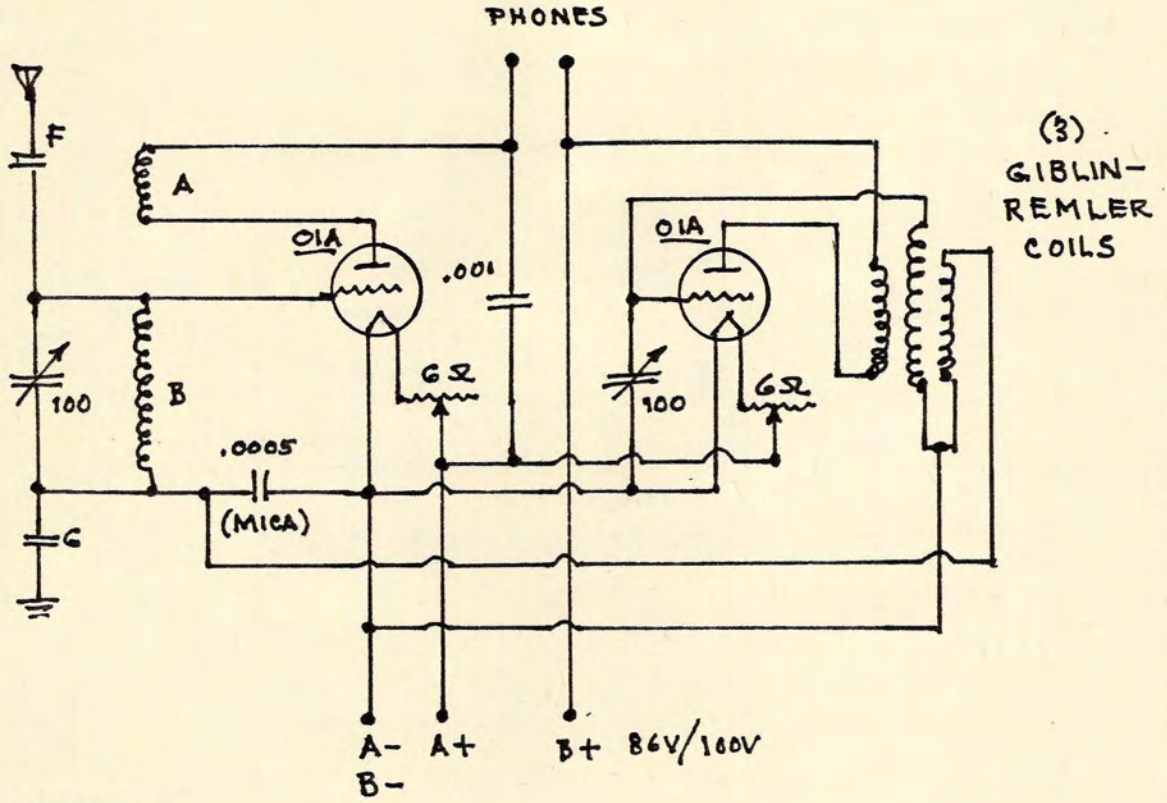

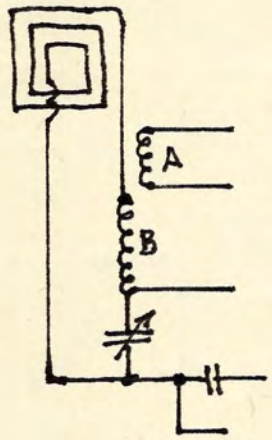

LOOP CONNEXIONS

(R 10-22)

NOTES:

1. REMLER coils must be insulated .
2. A & B are close-coupled coils.
   "A" = 100 T Honeycomb;
   "B" = 35-50 T Honeycomb.
3. Greater efficiency using "A" coil as stator and "B" as rotor.
4. "F" & "G" may be 4" bell-wire twisted, as a fixed condenser.

ARMSTRONG SUPER-REGENERATIVE, 1923

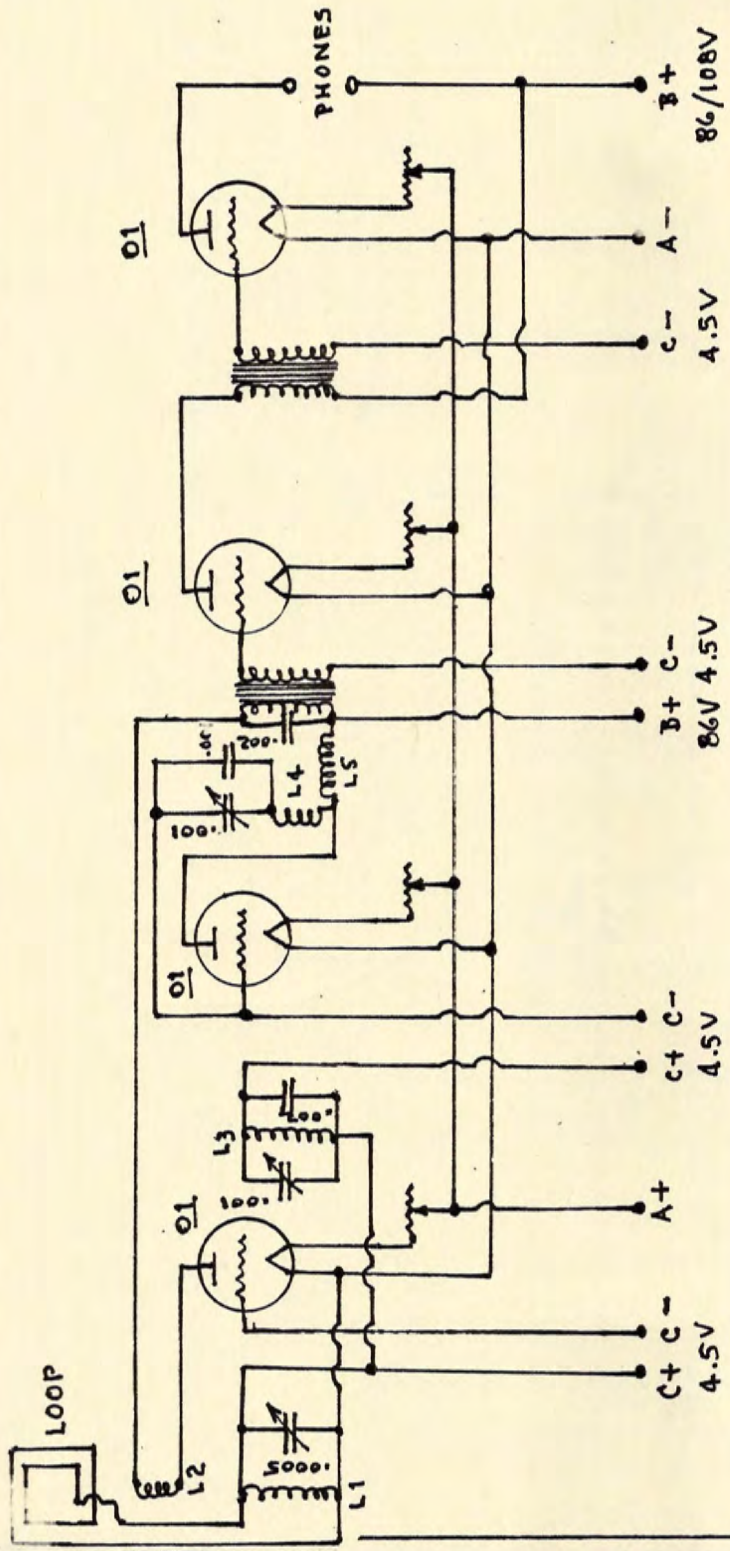

OPERATION:

1. Filaments @ full brilliance.
2. Full capacity of Variables.
3. Loosely couple L_1 & L_2.
4. A high-pitched whistle should come.
5. Vary coupling of L_1 & L_2, until a hissing sound is heard.
6. Vary L_1 - L_2, & 1st Variable.
7. Vary 2nd & 3rd Variable.
8. Continue varying all values until signal is readable.

COIL DATA:

L_1 = 50T
L_2 = 100T (TICKLER)
L_3 = 1,250T
L_4 = 250T
L_5 = 1,500T
(REMLER, HONEYCOMB TYPE, OR VARIOCOUPLER MAYBE SUBSTITUTED FOR L_1 & L_2.)

Fixed Cond. = MICA.
JEFFERSON XFRMRS.
C-Bias Batteries In Series w/ Grids.
Very Fine Adjustment Required on FIL of First 2 Tubes.
I.C.W. condition only, reverse TICK. connections.

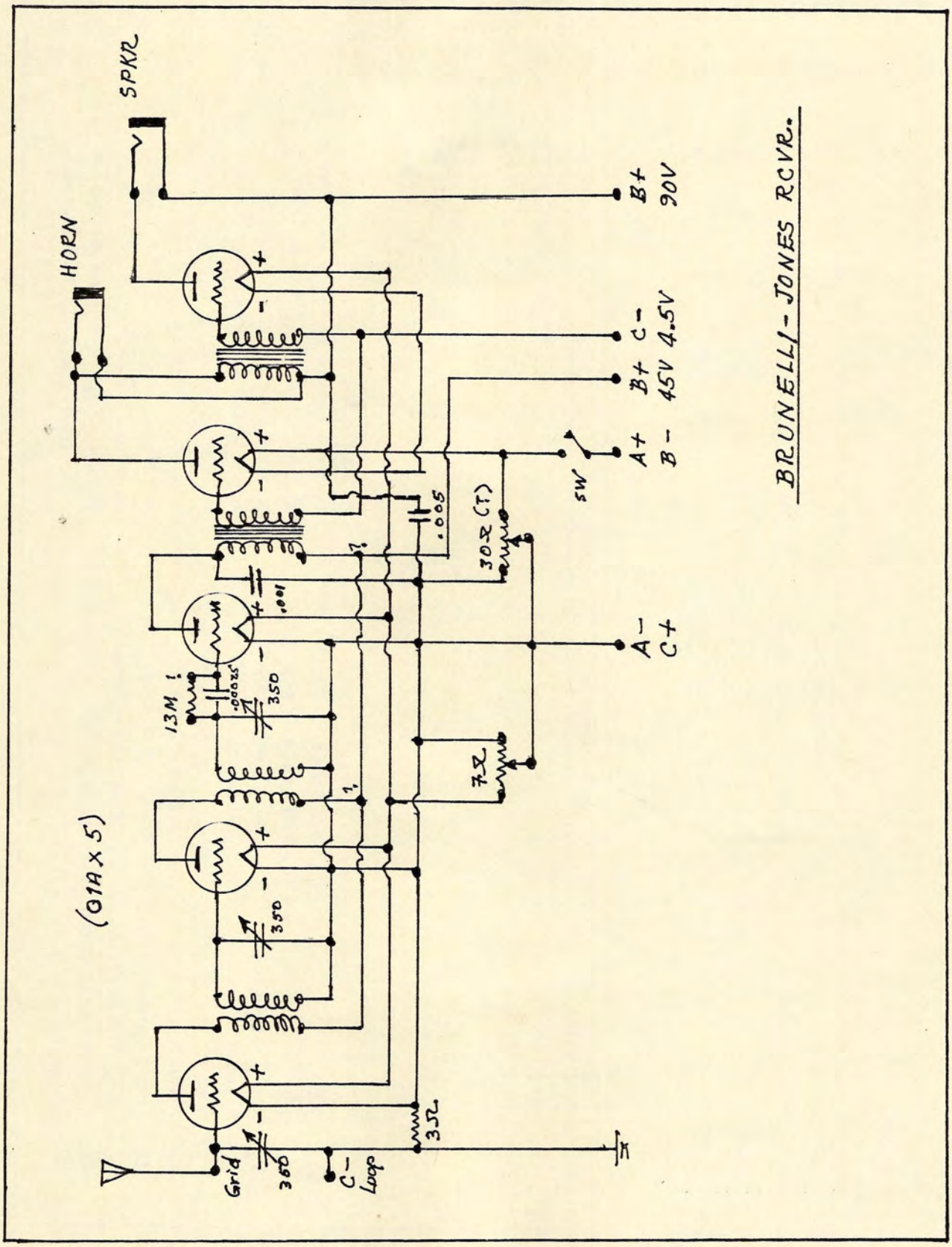
SPKR
HORN
(G1A x 5)
B+ 90V
C- 4.5V
B+ 45V
A+
B-
SW
A-
C+
.005
30Ω (T)
.001
1.3M
.00025
350
7Ω
3Ω
Grid
C-
Loop
BRUNELLI-JONES RCVR.

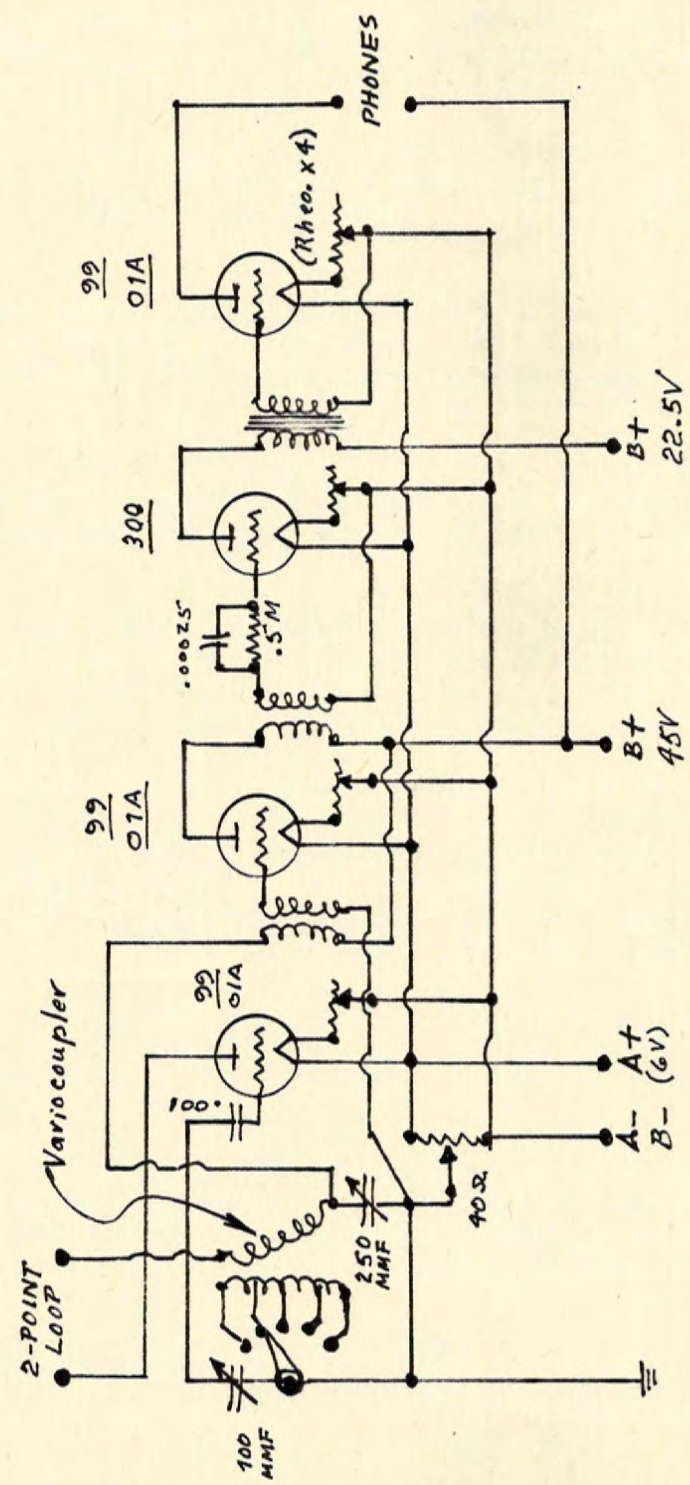

REGENERATIVE LOOP SET, 1922

NOTE:

Rotor of Variocoupler was used for regeneration on the 1st tube. This made for critical directional effects of the Loop.

ON CRYSTAL DETECTORS

The crystal detector came into existence for general use, as opposed to earlier experimental use, around 1908. The first mineral being carborundum, and requiring a local battery for operation.

Other minerals came into vogue as the art progressed, such as molybdinite, titanium dioxide, copper pyrite, Galena, iron pyrite, and "Perikon", an alloy of zinc oxide and copper pyrites. In time, Galena became the most widely used

In the battery-type crystal detector, a DC voltage of small magnitude: was passed through the crystal at all times, which was delivered to the DET by the receiving set to aid or oppose the DC, as crystals conduct current better in one direction than another.

The rectifying type, Galena - for example, acted as a valve, passing one-half the cycle of an AC. The half held back was pulsating DC, and if properly connected to a condenser, could be charged, and from that operate a pair of phones.

The received energy operated the head-set, the received signal varying in accordance with the way in which the energy was transmitted. Crystals were not capable of remaining constantly in a sensitive position. They were liable to oxidation and dirt, which would broaden the tuning of the receiver.

Good Galena had a wavy surface: Galena with regular cubical crystal forms was quite poor, and could have no sensitive spots at all. Carborundum was of varying sensitivity, with the mandatory requirement that this mineral had to be absolutely tested in a most careful manner. The light green, semi-translucent crystals found at the base of large crystal masses was the only kind of carborundum that proved to be sensitive at all.

Crystal mountings had to be solidly secure, with a very light contact allowed to rest on it. The contact was usually a thin copper wire. On the other hand, carborundum required heavy contact pressure, and the use of steel phonograph needles was common.

With all crystal detectors, the signal received at the head-set depended on the current the crystal received, not its potential. Resistance in crystals would vary from 2K-ohms to 10Kohms, when adjusted for reception. This would roughly approximate its impedance. Head-sets had to be on the order of 2K to 3K-ohms, DC resistance.

CW signals over distance of 7,500 miles were capable of being received on some of the better crystal sets, which was impressive.

THE BASIC CRYSTAL CONCEPT

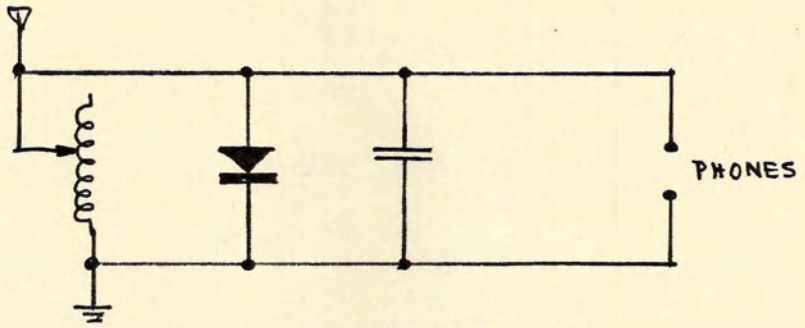

A BASIC CRYSTAL DETECTOR CIRCUIT

Oscillatory circuit composed of ANT, a variable inductance, and GND. The xtal. was connected directly across this circuit.

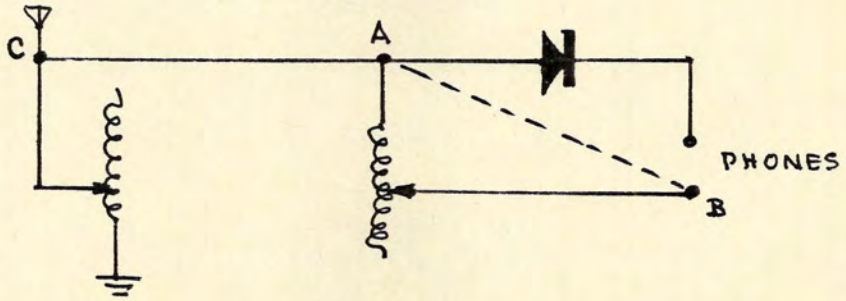

A UNILATERAL EXPERIMENTAL CIRCUIT

"C" must be tied at both "A" and "B". This hook-up will function only at one or the other.

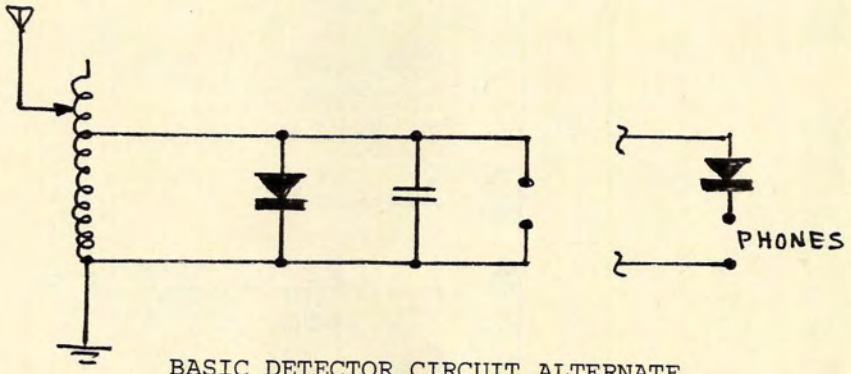

BASIC DETECTOR CIRCUIT ALTERNATE

GENERAL NOTES

1. The base of the crystal must be rigidly mounted, while the whisker should be lightly mounted.

2. Galena crystal with a smooth face is best for mounting in an horizontal position.

3. Galena whisker should be moved with a pencil-point, and then tightened down in the best position.

4. Galena and Silicon sensitivity created one of those unresolved controversies among devotees of both.

5. The Carborundum detector arm will rebound with vertical vibrations, and undergo tortion in the horixontal plane. Of all early crystals, the Carborundum required the most rigid support, great pressure on the point (steel), and a high-voltage battery.

6. Carborundum and Bornite-Zincute did not require much delicacy of design.

7. The sensitive spot on a crystal could be burned out through a strong signal, or the effects of a local transmitter.

8. A common early error was to short-out the crystal while transmitting, which quickly became self-defeating.

9. Best procedure while transmitting was to disconnect both sides of the crystal from the circuit.

10. Crystals should be covered with a metal box or a Bakelite cover lined with tin-foil, placed gently over the crystal after adjustment.

11. Shunting a crystal with a switch forms an oscillating circuit, and should never be employed, as it will destroy the crystal very quickly.

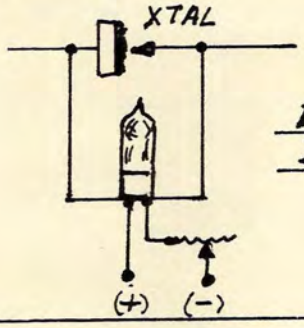

REPLACING A XTAL. DET W/ A DIODE

EARLY CRYSTAL DETECTOR CONFIGURATIONS

(1919-1924)

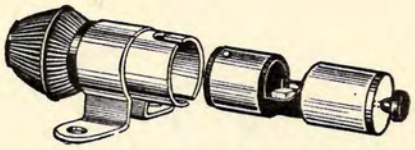

STAR - $1

AMRAD

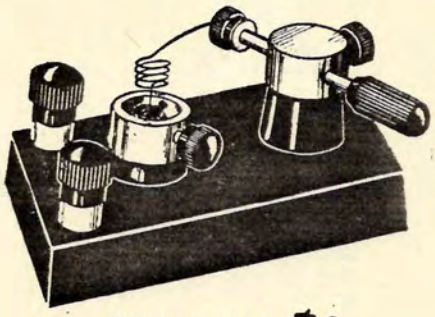

WILLIAMS - $3

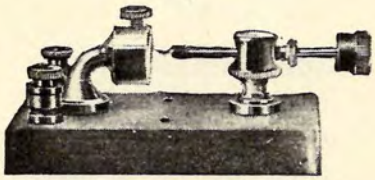

EMSCO - $1.50

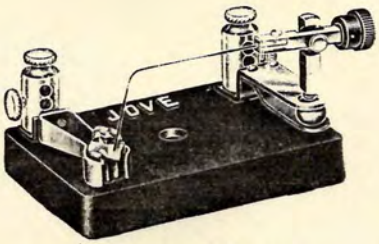

BUNNELL - $1.44

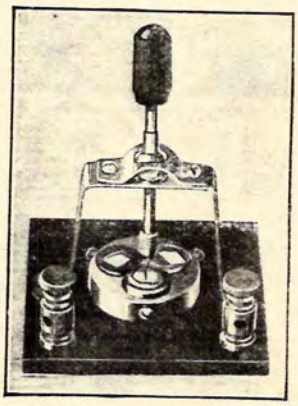

RADIOPHONE - $2.50

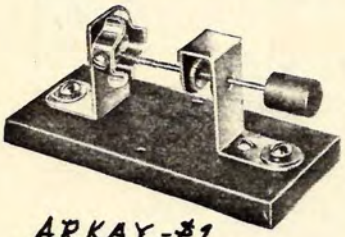

ARKAY - $1

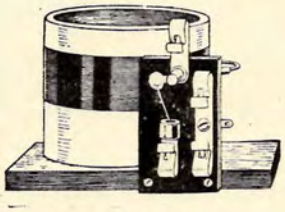

LAMBERT
$3

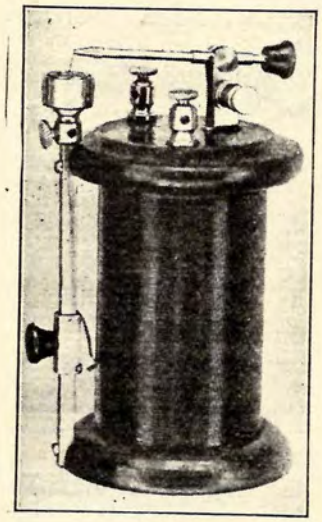

RITTER - $3

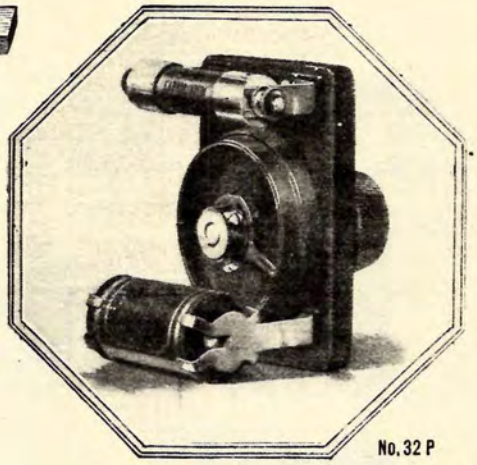

CARBORUNDUM - $3.50

EARLY CRYSTAL DETECTOR CONFIGURATION

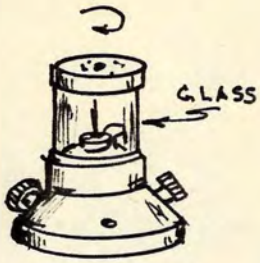

"YELLOWTIP"
Wholesale Radio
(1923 - $2)

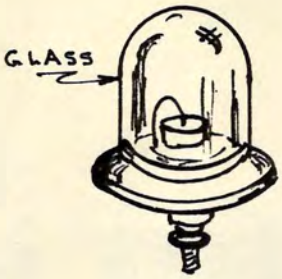

"GREWOL"
Randel Wireless
(1923 - $2)

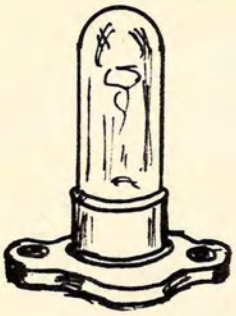

XTAL. TUBE DET.
B-Metal
(1923 - $1.50)

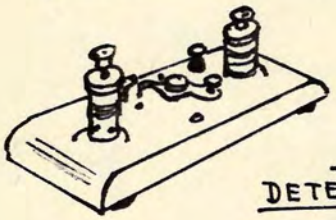

AMRAD
DETECTOR STAND
(1919)

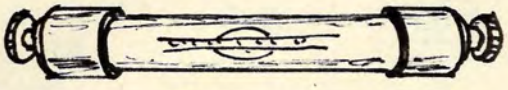

"RALSA"
DAVIDSON RADIO
(1923 - $1.25)

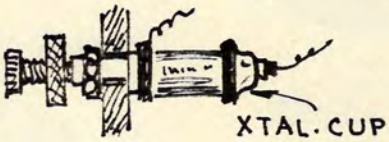

FOOTE "VARIODETECTOR"
(1924 - $1.75)

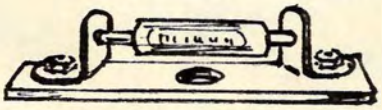

SANFORD RADIO
(1925 - $1)

CARBORUNDUM XTAL. DET., 1920

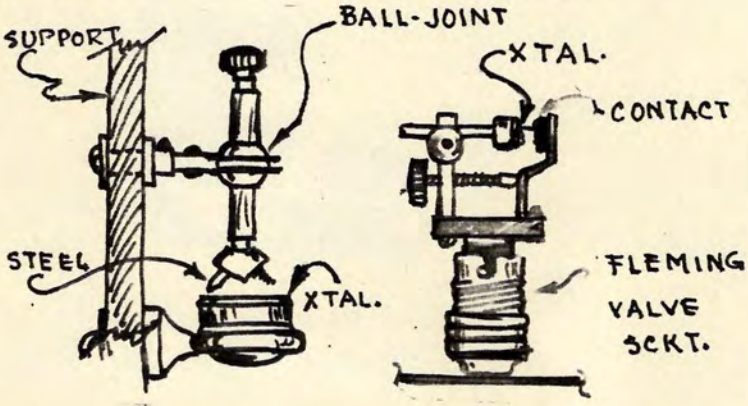

ALSWORTH &
ROBINSON
(1925 - $1.50)

EARLY CRYSTAL DETECTOR CONFIGURATIONS

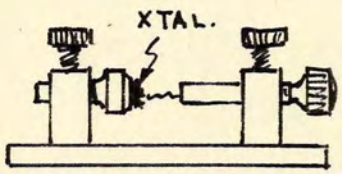

GALENA

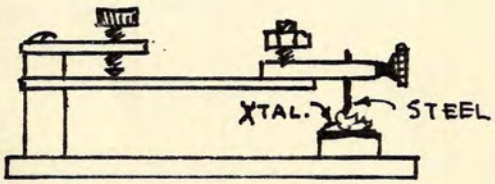

CARBOROUNDUM

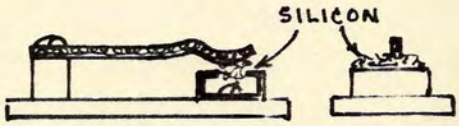

SILICON

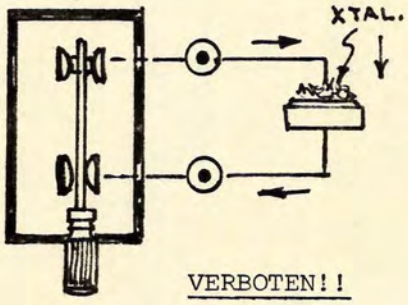

VERBOTEN!!

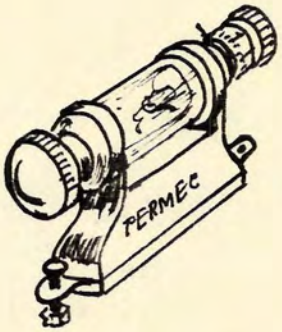

A rather sophisticated Crystal Detector from England, encased within a glass cylinder, and with dials for logging and calibrating signals received.

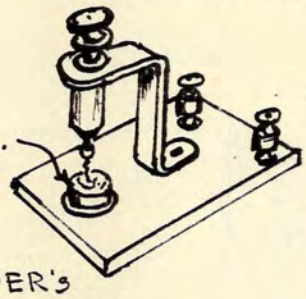

1908
FASSENDER'S
"ELECTROLYTIC"

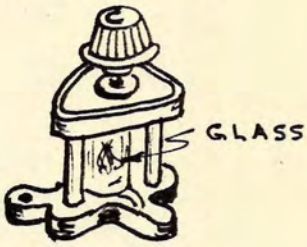

FRESHMAN
(1925 - $1.50)

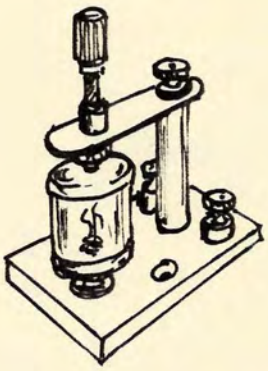

FADA - 1922 - $2.25

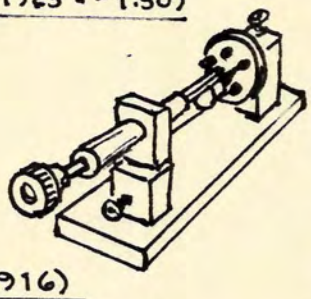

BORNITE-
ZINCITE
(4-Position)
XTAL. DET. (1916)

(SEE ALSO VOL. VII)

SINGLE SLIDE TUNING COIL WITH A CRYSTAL DETECTOR - 1920

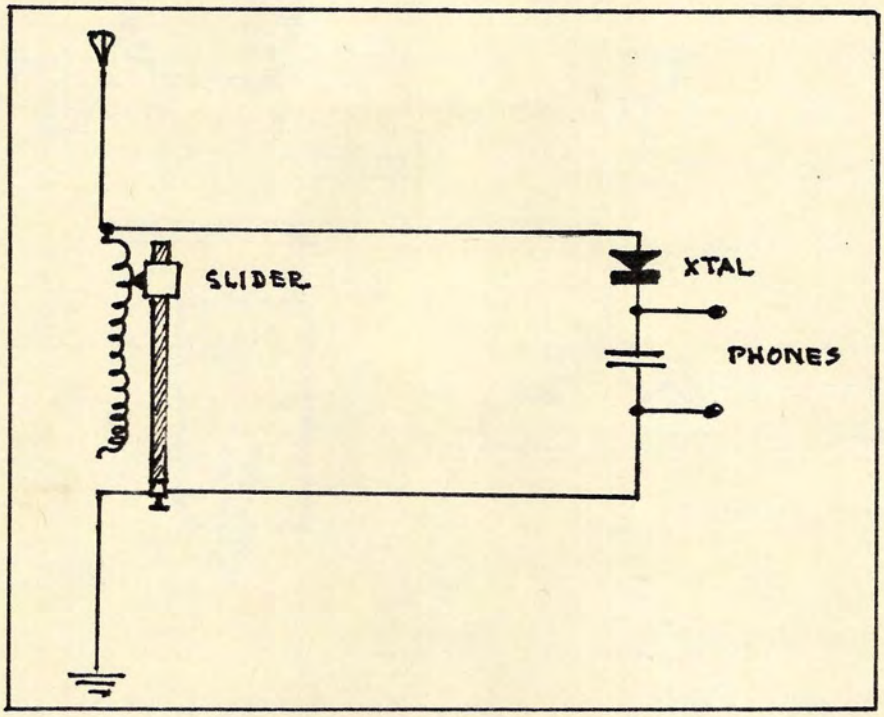

DOUBLE-SLIDE TUNER COIL WITH A CRYSTAL DETECTOR, 1920

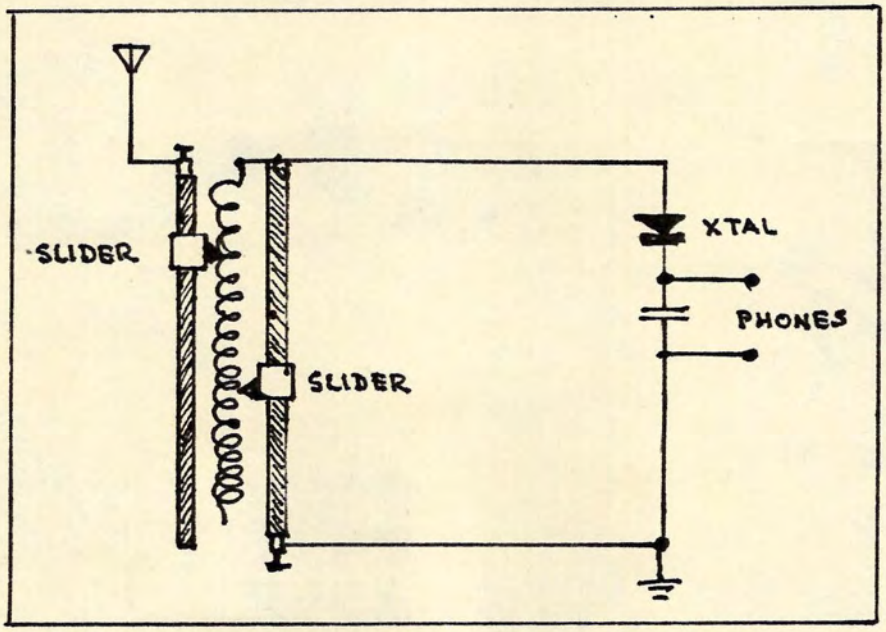

LOOSE-COUPLER CONSTRUCTION, 1920

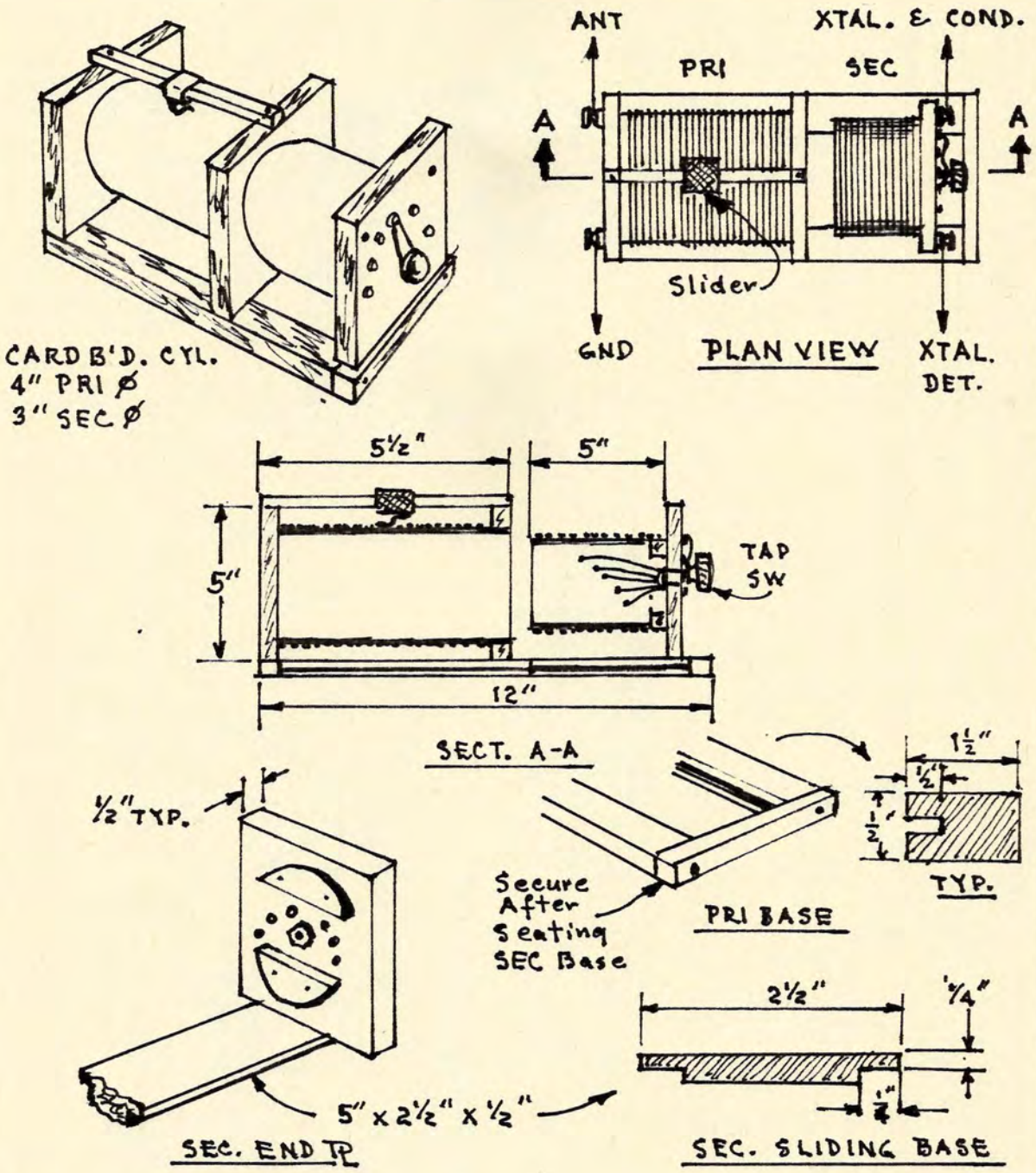

COIL DATA:
PRI = #20 Enamelled Wire, 3/8" From Each End.
SEC = #24 DCC, 1/8" From Each End. Tap @ 3/8", 1", 1¾", 2½", 3½", 4⅝".

(RN 4.21)

CONSTRUCTING A 1-HENRY CHOKE, 1922

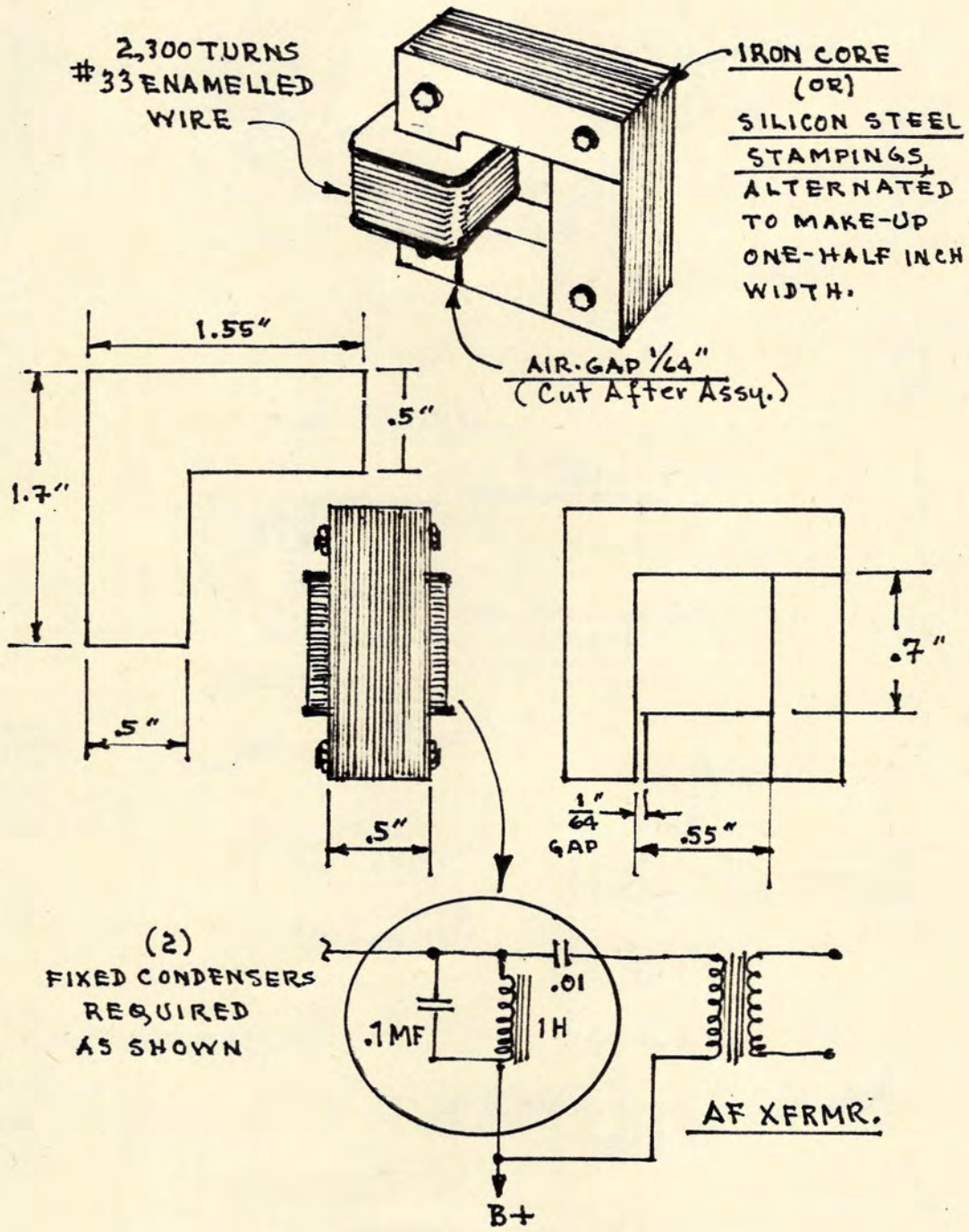

TUBE DETECTOR & CRYSTAL TUNER, 1922

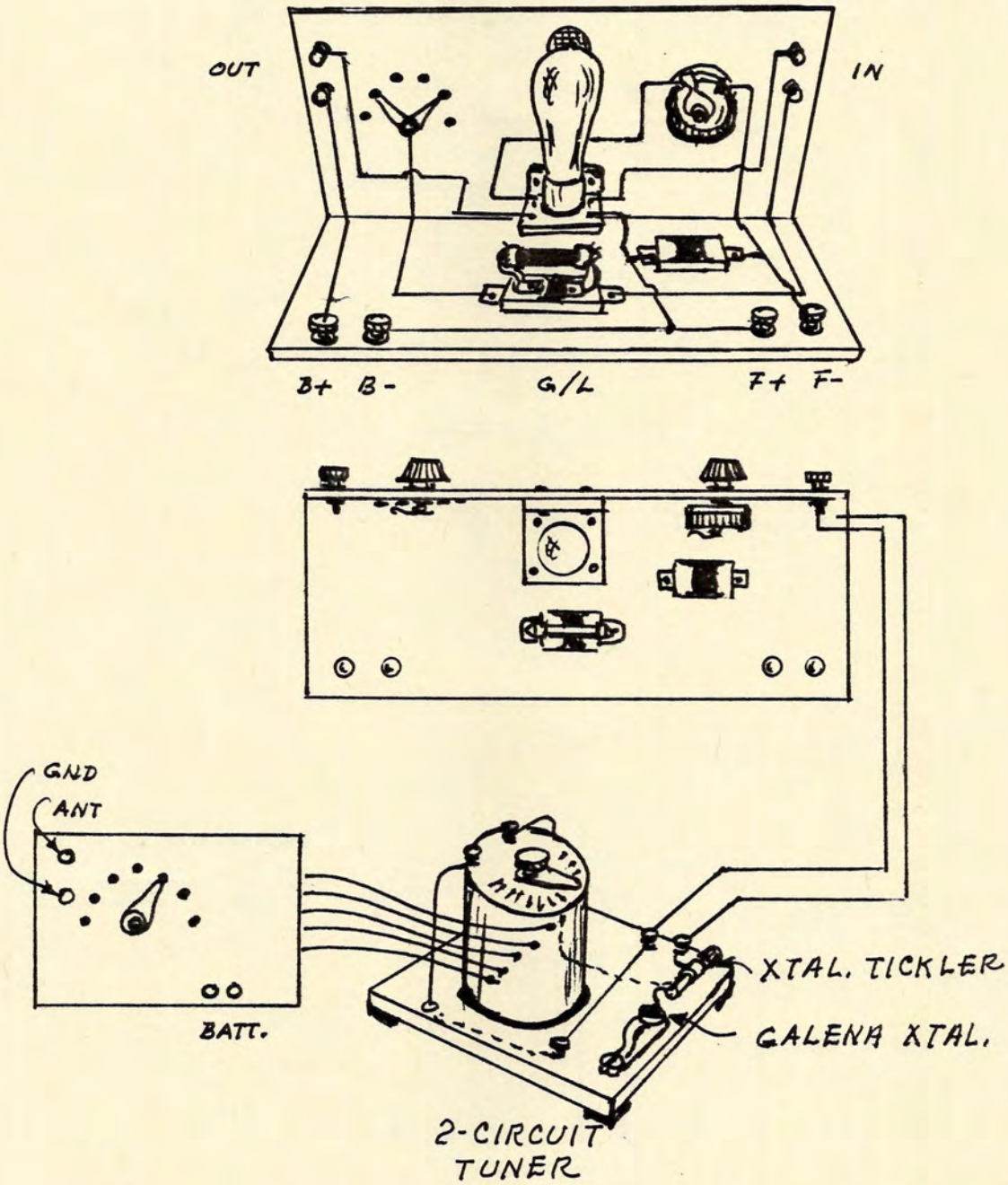

G/L ASSY. = 1-5Mohms; .0003mfd. Cond.
By-Pass = ,003/.0015 mfd.

Rheostat = 7-ohms, 1½A.

"B" BATTERY-LESS RECEIVER

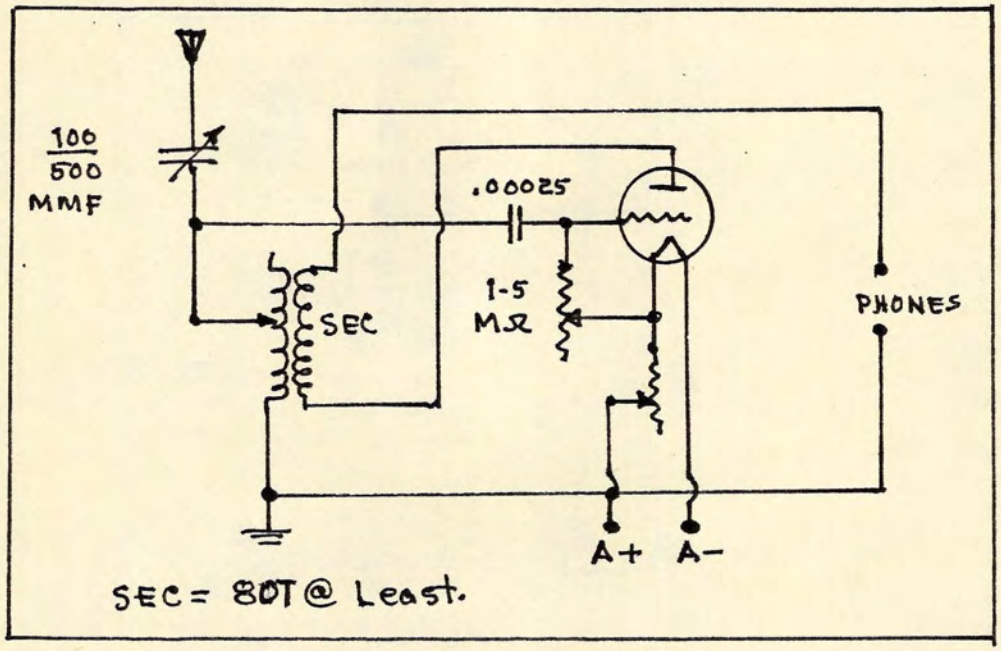

CRYSTAL DETECTOR WITH RF AMPLIFIER

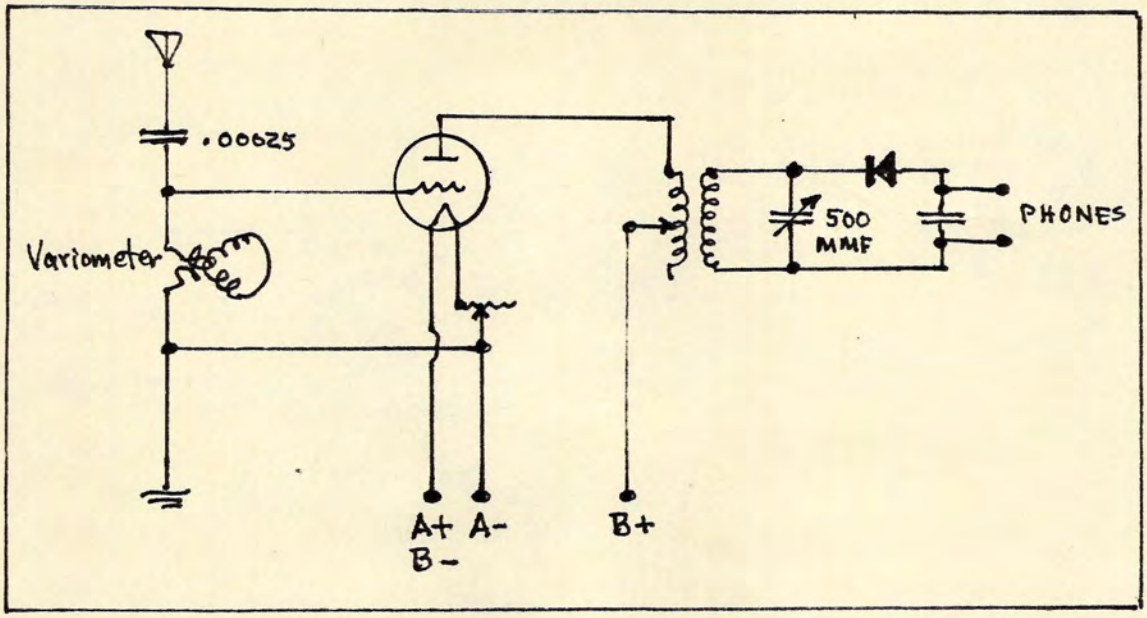

A DOUBLE CRYSTAL RECEIVER, 1922

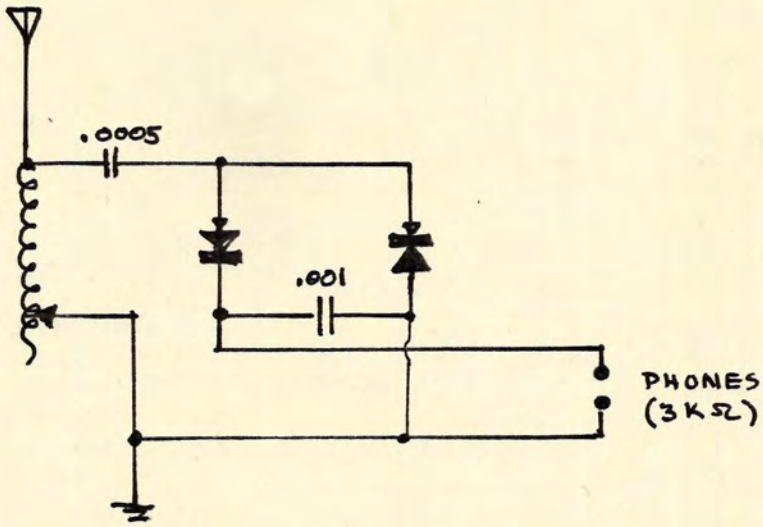

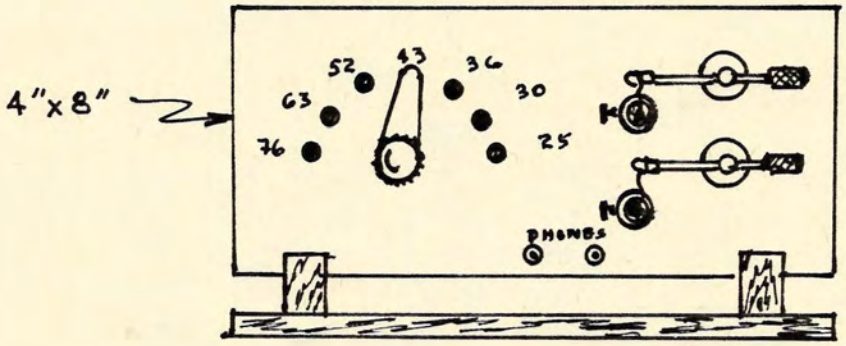

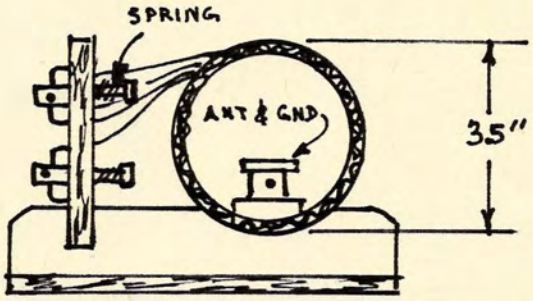

Each xtal. consisted of a spring-loaded pivot, a cat-whisker stem slidable through a transverse hole in the end of the pivot.

REPLACING A CRYSTAL DETECTOR WITH A TUBE DETECTOR, 1922

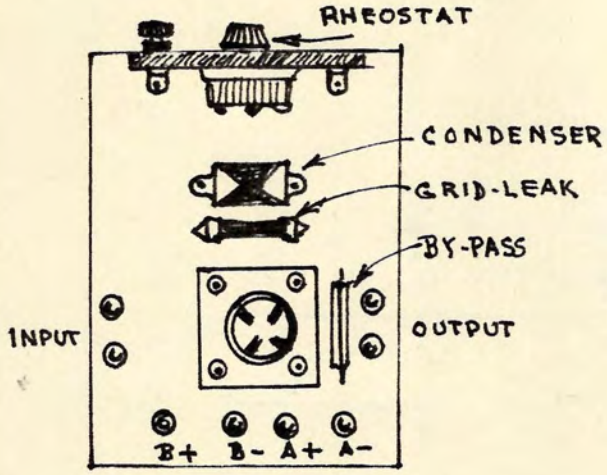

BASEBOARD
6¼ x 8¼ x ½"

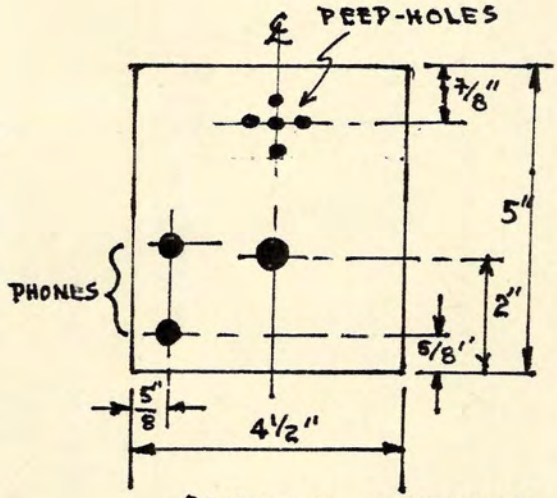

3/8" THICK HARDWOOD
(REAR VIEW)

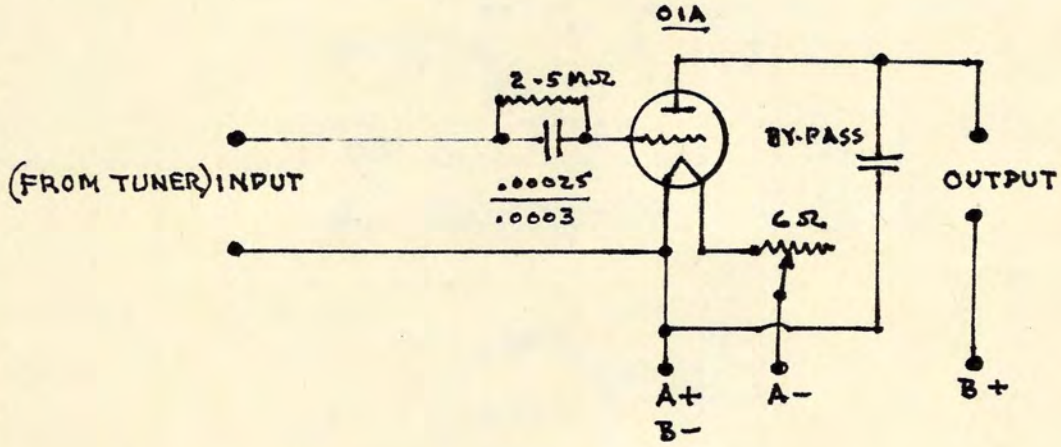

May be used with Single or Double-Circuit tuners.
This unit was designed by the U.S.Bureau of Standards
(now the National Bureau of Standards).

(R 10-22)

TYPICAL LOOP CONNEXIONS

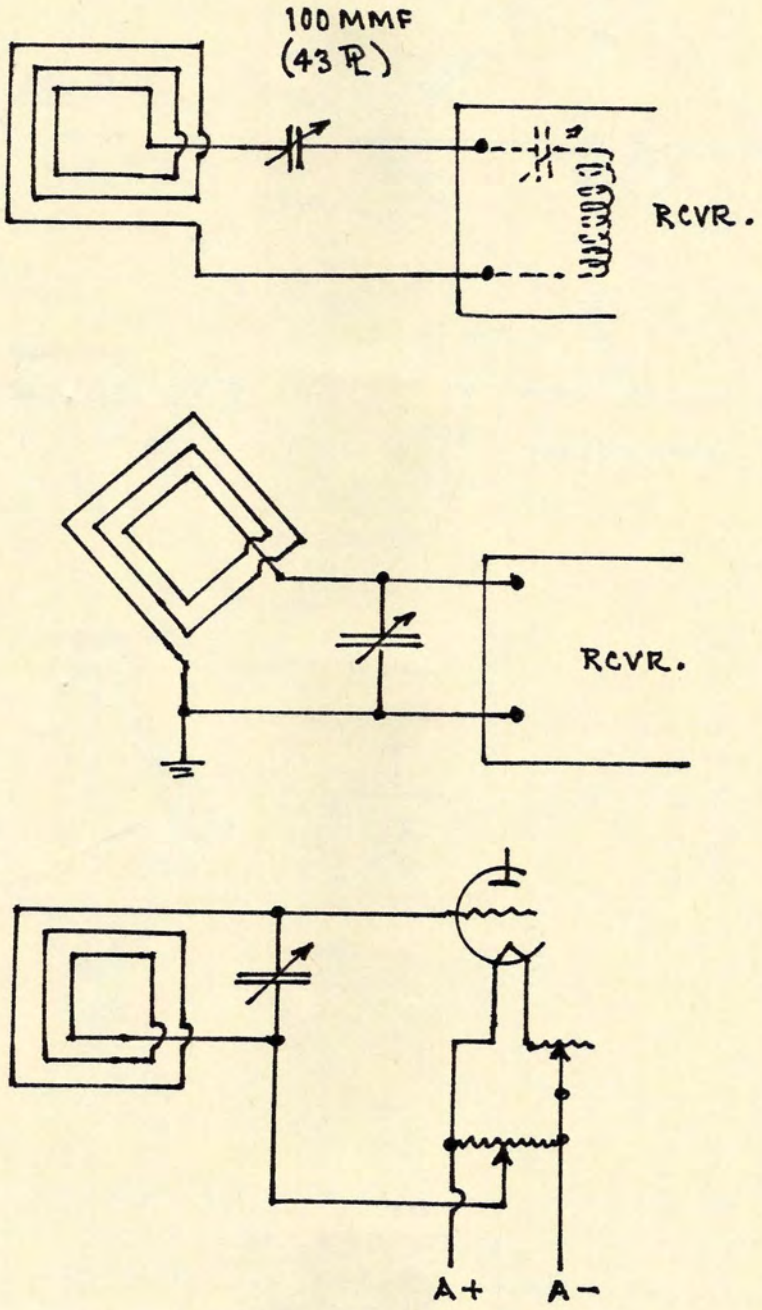

TYPICAL LOOP CONSTRUCTION

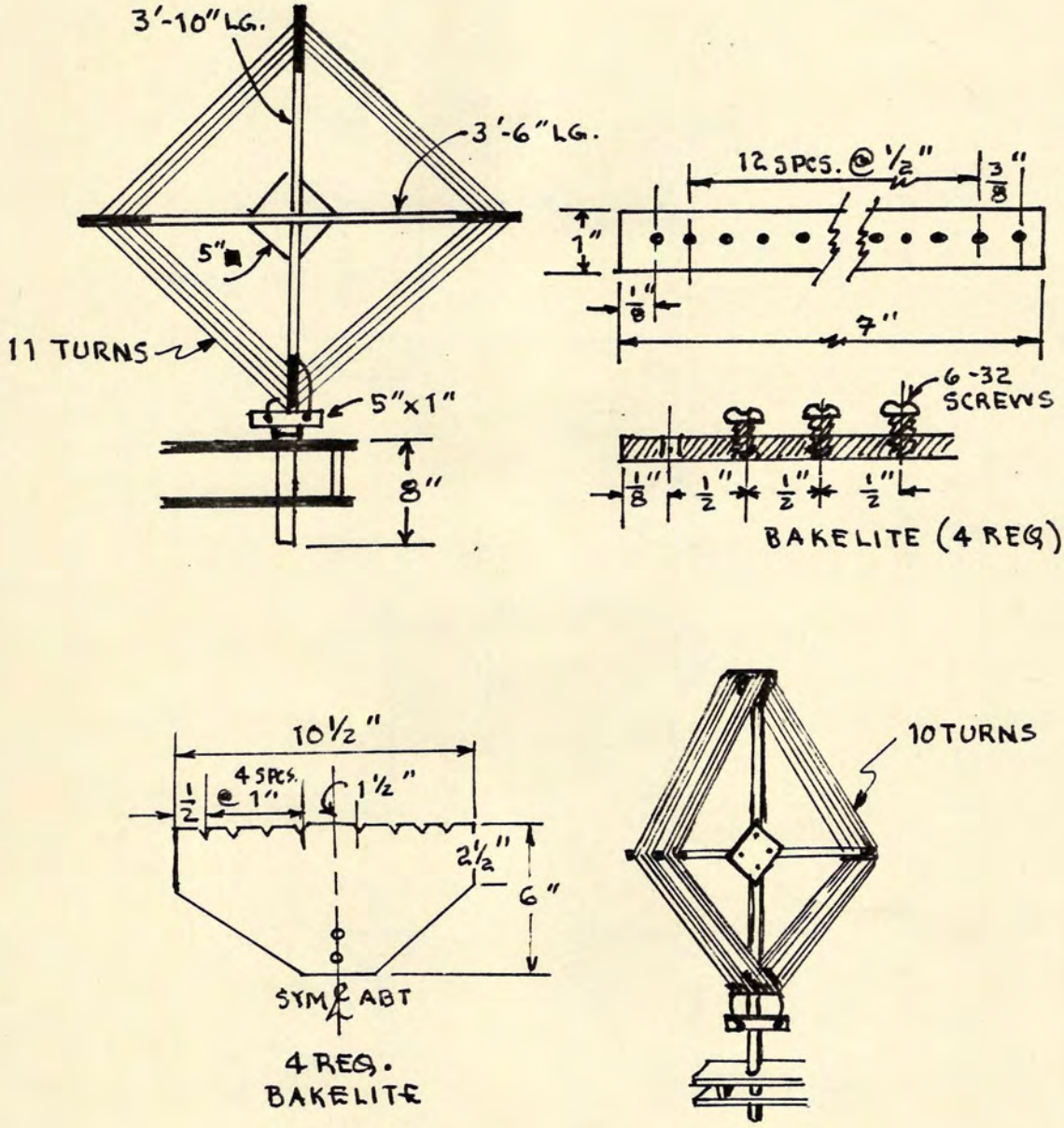

NO PARTICULAR KIND OF WIRE CAN BE SAID TO BE BETTER THAN OTHERS. BELL-WIRE, LAMPCORD, SILK COVERED/COTTON COVERED, BRAIDED BARE COPPER WIRE. ("LITZ" WIRE WAS OVER-RATED.)

TO MAKE BASKETWEAVE COILS, 1923-1924

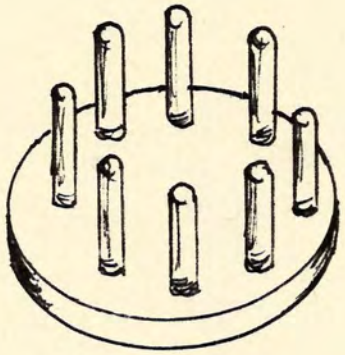

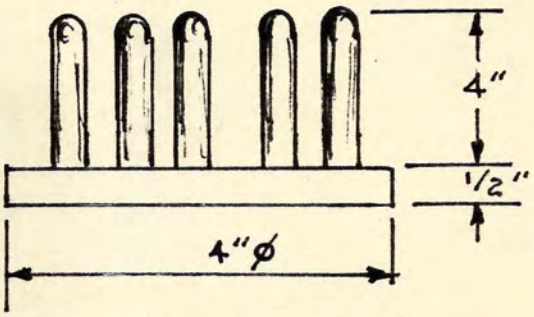

Circular brass base, with 3/16" Ø brass rods screwed into base, as shown. Eight rods required.

A wood base and dowels may be substituted, if more convenient.

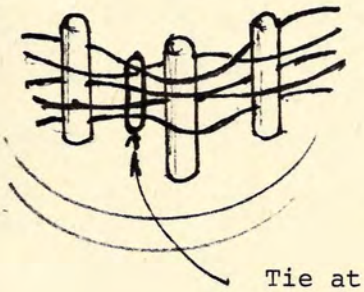

Tie at two or three places before removing.

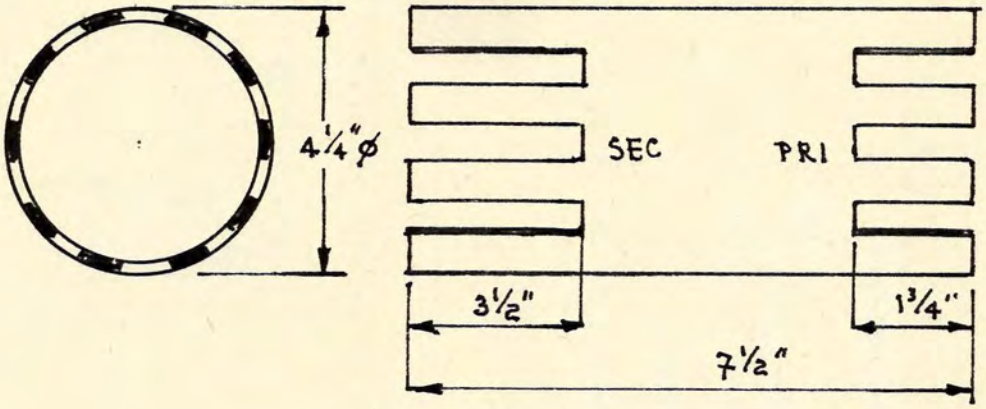

Bakelite tube divided around circumferance into 22 equal divisions. Cut out 11 of these divisions; de-burr edges.
PRI = #18 DCC, tapt @ 8, 20, 38, 60 turns.
SEC = #28 DSC, 90 turns, tapt @ 15, 30, 55, 90 turns. Start counting for taps from ends of PRI and SEC closest to each other.
The slot width is exaggerated in the above sketch for clarity; it should be the thickness of a hacksaw blade.

TO MAKE BINOCULAR OR FIGURE-8 COILS, 1922

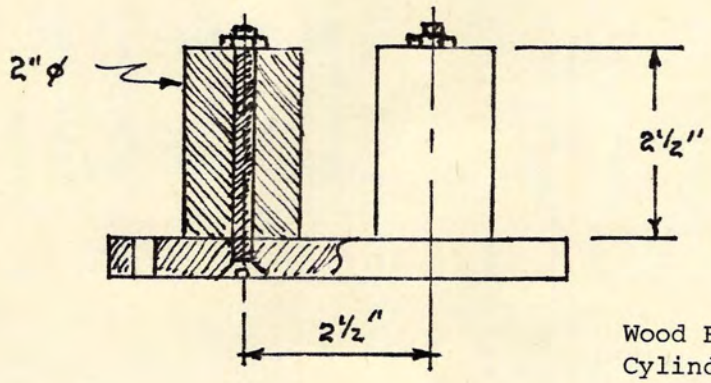

Wood Base & Cylinders.

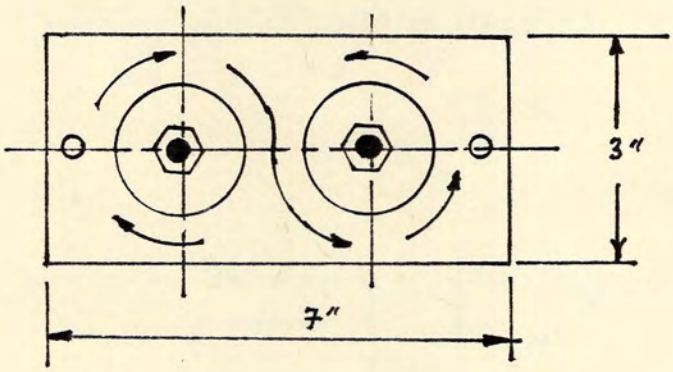

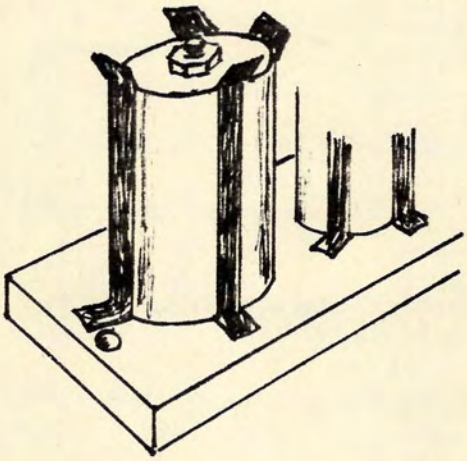

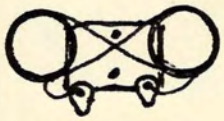

PLAN

Place surgical-plaster or glue-strips as shown to hold wire. When completed, fold over strip ends to make a free-standing coil.

AUDION CONTROL CABINET, 1922; Sht. 1

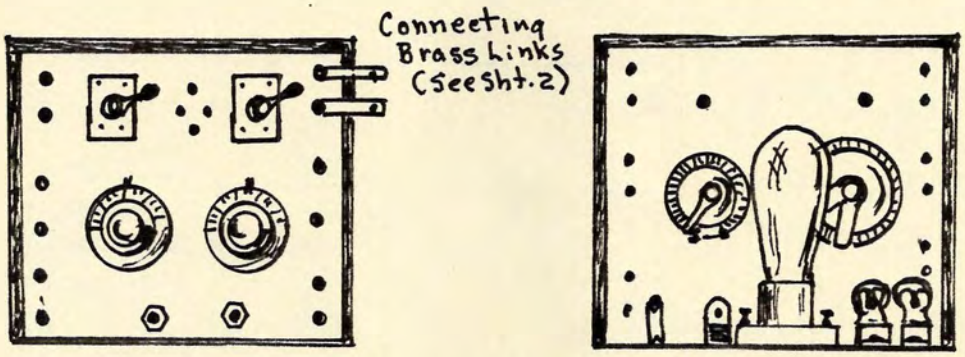

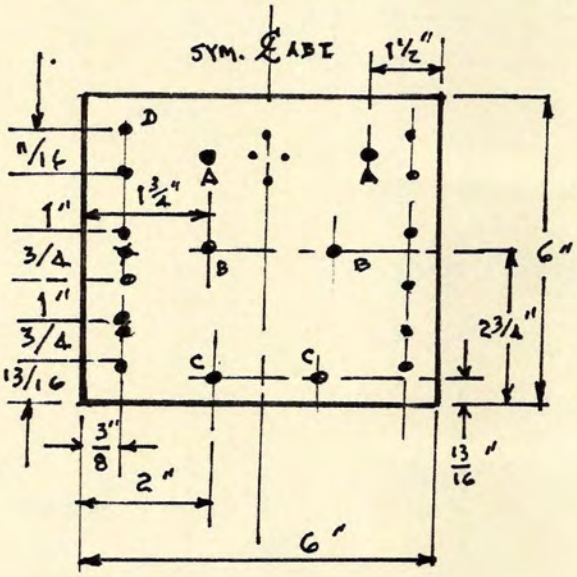

HOLE DIA.:

A = 7/8"
B = 13/64"
C = 7/16"
D = 5/8" (12)

•

2" Ø Dials.
Conn. Sw. 15-Y.
Remler Socket.
Paragon Rheo.
Federal Jacks.
RCA Pot.
#18 Hook-Up.

•

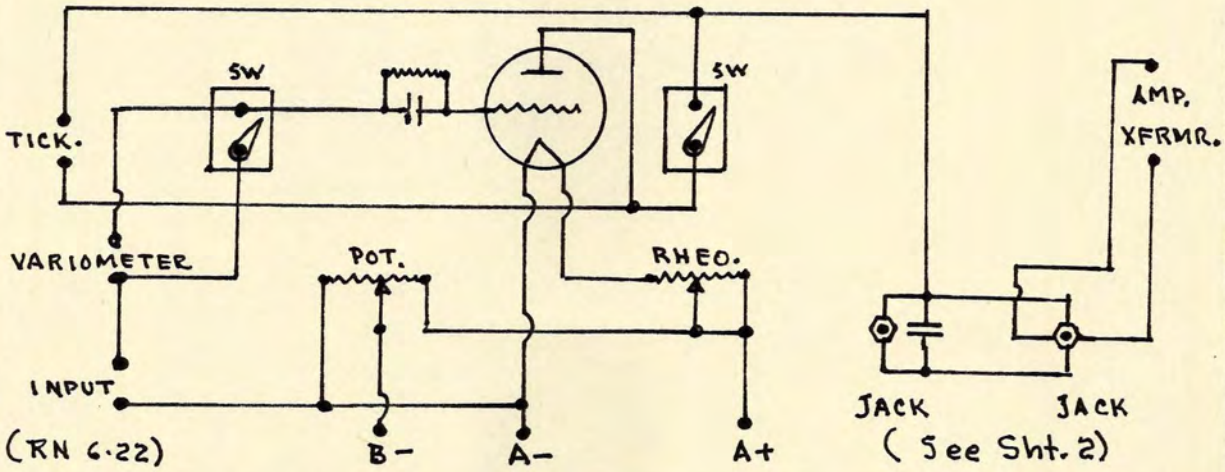

AUDION CONTROL PANEL, 1922: Sht. 2

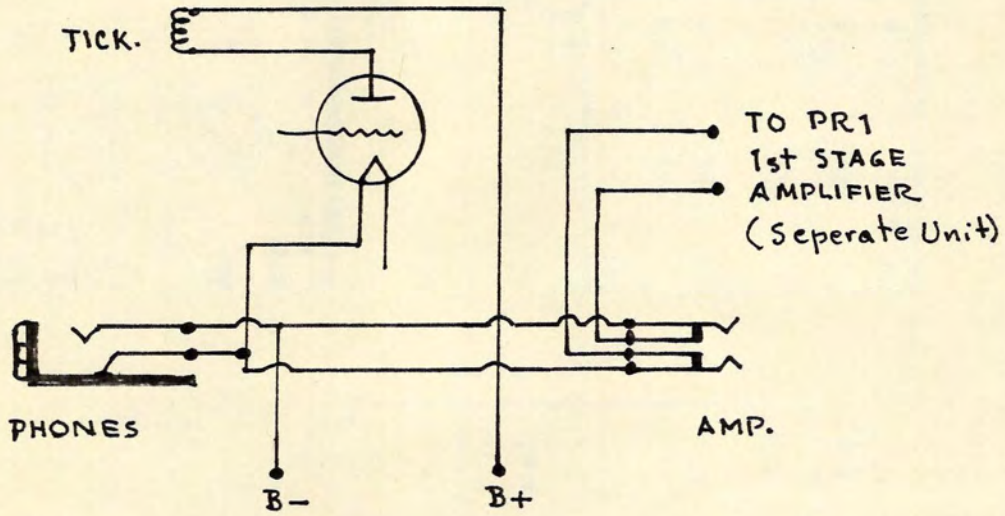

JACK CONNEXIONS

(12) Brass Connecting Links; used to join tuner and amplifier instead of wires; formed to suit.

Amplifier unit should also have a 2-stage jack, so that the PRI of the amplifier is automatically cut-out when phone plug is inserted into phone jack.

A DIFFERENT TUNER-COUPLER CONFIGURATION
(1922)

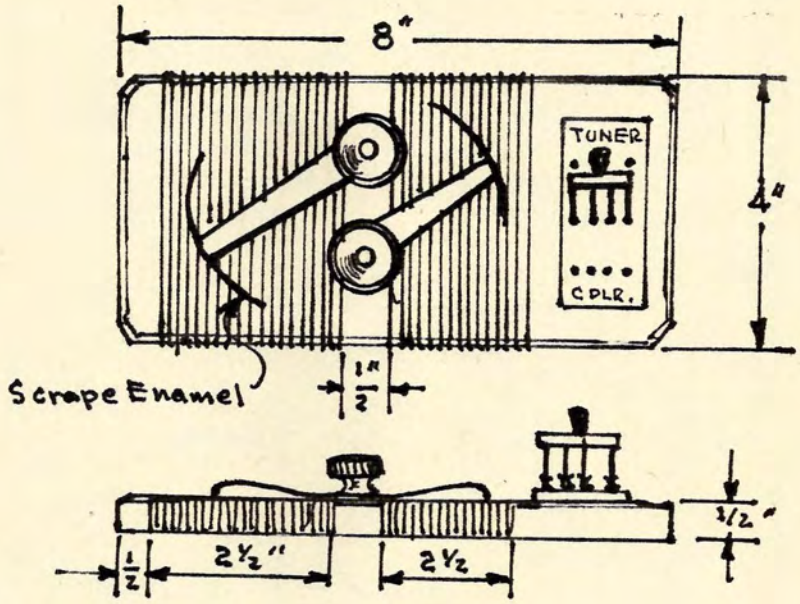

PROFILE

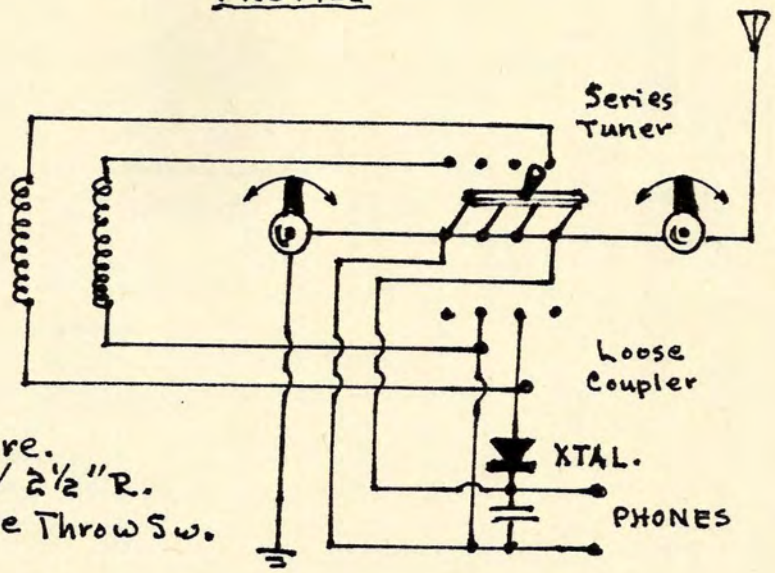

#24 Enamel-Wire.
(2) Tap Sw. w/ 2 1/2" R.
4-Pole Double Throw Sw.

Break all sharp corners on wood base.

(RN 4-22)

REX B-BATTERY ELIMINATOR
CONSTRUCTION DETAILS

Sht. 1

While it is extremely doubtful that there are those in the hobby of vintage radio who will construct their own transformers and chokes, it was part of the normal pursuit of the early home-constructors. Also, there were companies who offered pre-cut laminations, iron cores, end-plates, etc., to the enthusiast, which made it easier. Probably the most active of such companies was the Shore Electrical company, in New York. They were dominant in the early and mid-Twenties, and prices were advertised as follows:

Laminations, per set	$1.25
Spool Heads	.20
Core Forms	.10
Core Insulation	.05
Primary to Secondary Insulation	.05
Leatherette Covering	.10
#26 Wire, Enamelled	.70

Complete kits for both power transformers and chokes were also offered at $2.50, each. You might find it amusing to compare those prices with what it would cost you today to accumulate such parts.

While much data exist anent winding your own transformers in many early media, repetition of such data here would not advance very much the over-all educational thrust of this work. Therefore, primarily for your own edification, I will tell you how to construct your own transformers and chokes, using the basic data of the REX B-ELIMINATOR of 1925. Such data are typical, and there were elabourate graphs and charts offered for plotting transformers and chokes of this-or-that capacity - some good, some useless, and several rather dangerous.

Actually, the electrical theory behind all of the early battery-eliminators was quite sound. What threw a monkey-wrench into most early eliminators was simply the state of the metallurgical art. Today, we take for granted the durable properties of metals and wire; in the mid-Twenties, this did not obtain, even unto the old square buss-bar - the molecular structure of which could change from batch to batch. Over-heating was a common complaint, and ruptures were frequent, although the ruptures were usually directly attributable to the careless construction of condenser blocks, acting as modern electrolytics.

The rise of battery-eliminators is, in itself, a fascinating side-light of early radio, and there were, literally, hundreds of such units on the market during the mid-Twenties, quite a few of which are depicted in Volume V of these SKETCH-BOOKS. Chemical battery-eliminators are of academic interest, and in as much as these volumes seek to offer useful information, are not listed here. * * *

REX B-ELIMINATOR CONSTRUCTION DETAILS Sht. 2

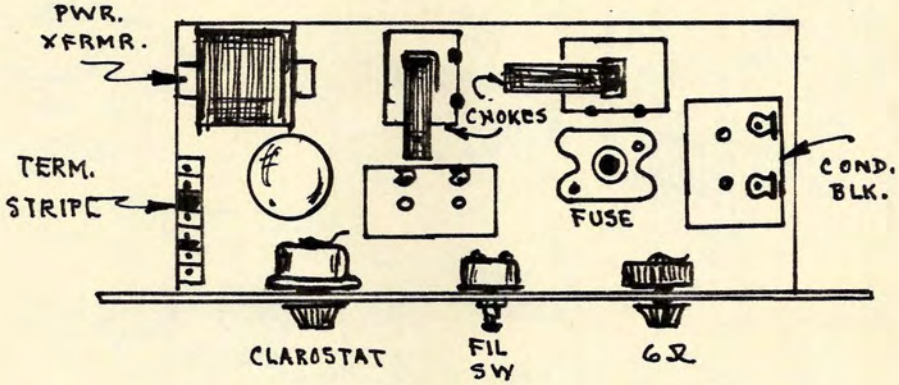

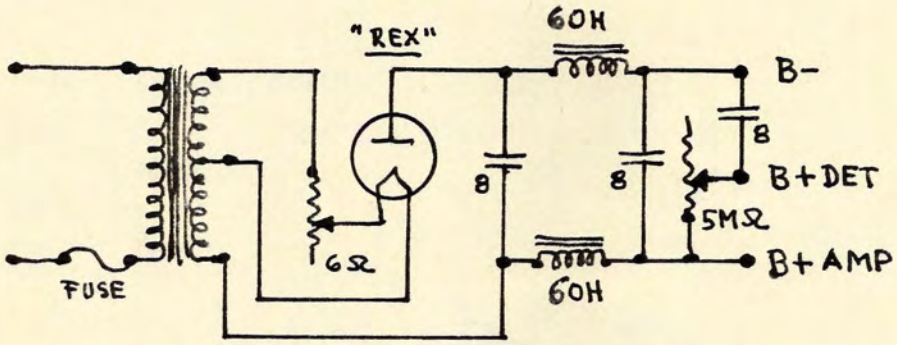

PARTS:

1. AC 220V STEP-UP XFRMR. } SHORE MFG. CO.
2. 60 HENRY CHOKES (2). } SHORE MFG. CO.
3. REX "MAGNATRON" RECTIFIER TUBE.
4. 5M Ω CLAROSTAT.
5. 25A FUSE (See NOTE.)
6. 8 MFD CONDENSERS (3).
7. PANEL = 7" x 14".
8. BASEBOARD = 11¾" x 7 3/16".

NOTE: FUSE WAS SCREW-BASE, IN PORCELAIN SCKT.

REX B-ELIMINATOR CONSTRUCTION DETAILS Sht. 3

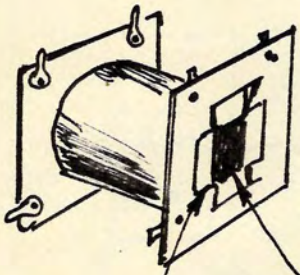

COIL FORM & XFRMR. HEADS

3/4" WOOD BLOCK

FIG. 1

CHOKE (2)

#26 ENAMELLED WIRE
8,000 TURNS

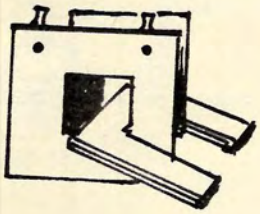

CHOKE COIL HEADS w/ A COUPLE LAMINATIONS SHOWN.

FIG. 2

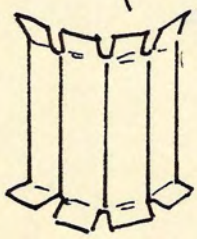

FIBRE CORE (COIL FORM) 3 REQ.

FIG. 3

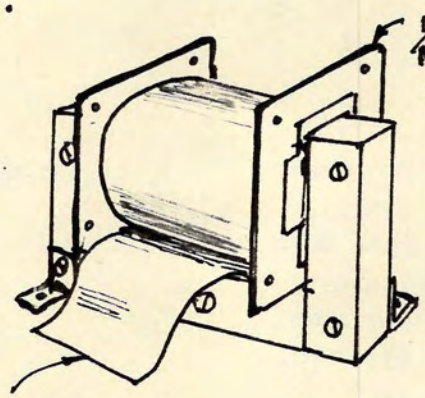

1/16" FIBRE (TYP.)

LEATHER COVERING

FIG. 4

XFRMR

#26 ENAM. WIRE
807 TURNS
PRI WINDING

#26 ENAM. WIRE
1,614 TURNS
SEC WINDING

#18 DCC WIRE
44 TURNS
FIL WINDING

128 LAMINATIONS REQUIRED
(32 SEXIONS of 4 LAMINATIONS, EACH, PLUS 2 END PIECES.)
(RW 12-19-25)

REX B-ELIMINATOR CONSTRUCTION DETAILS Sht. 4

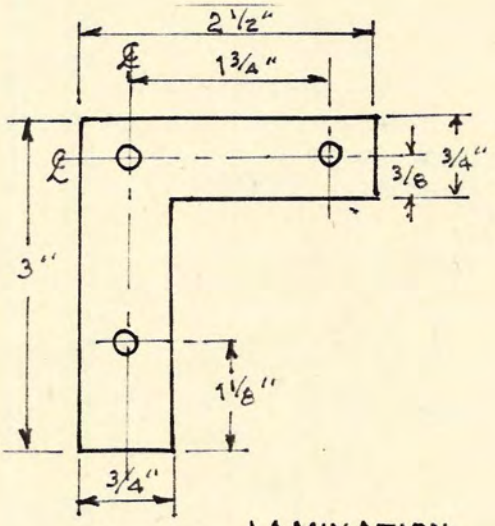

LAMINATION
(.014" THICK)
128 REQ.
FIG. 5

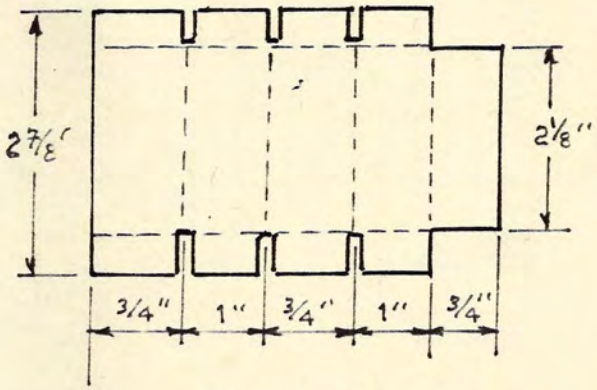

COIL FORM
(3 REQ.)
FIG. 6

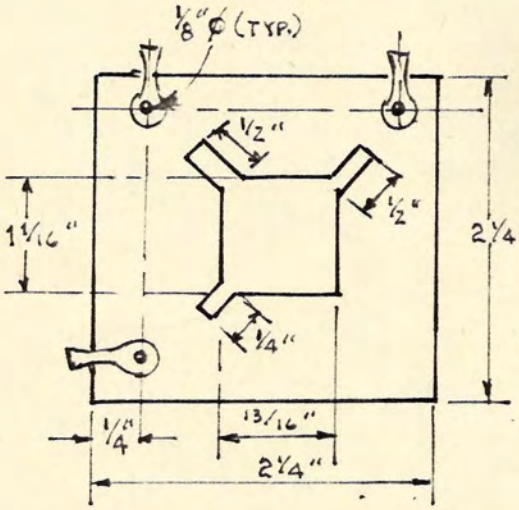

XFRMR. HEAD (2)
(Large Head)
FIG. 7

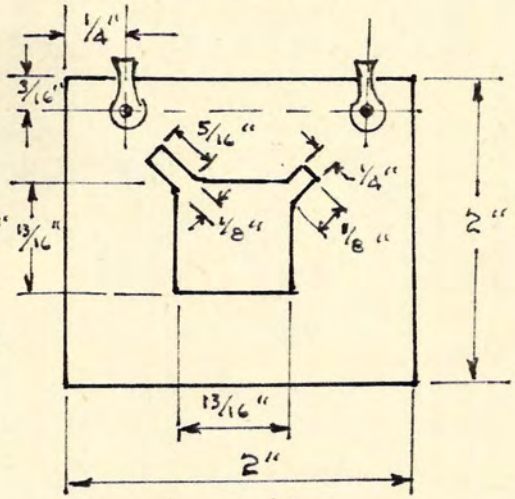

CHOKE COIL HEAD (4)
(Small Head)
FIG. 8

REX B-ELIMINATOR CONSTRUCTION DETAILS Sht. 5

It is easily established that technical instructions published in early radio media were not written by professional technical writers, although technical writing, as a distinct adjunct to engineering, did not come into being until after Hitler's War. Stated simply, the so-called technical instructions in early media were redundent, prolix, verbose - all of which merely means they were grossly over-written.

The following instructions have been epitomised from eleven printed columns in RADIO WORLD, on how to construct the transformer and chokes for the Rex B-Eliminator. You may never feel a compulsion to construct such items, but you may come by a sense of what a lot of early set-builders went through. It is difficult to imagine such dedication in our ranks today: still, it is worth remembering, as such information adds to one's sense of fraternity in any hobby.

1. Procure 2 pieces of 6"-square fibre, 1/16"th of an inch thick. Cut both pieces into (8) 3" squares.

2. Refer to Figures 7 and 8 on Sheet 4. Cut and drill fibre squares as shown.

3. Drill 1/8" holes on each square, as shown, for soldering lugs. (Original instructions called for hand-rivetting lugs.)

4. Take a new 6"-square piece of fibre and cut out as shown in Figure 6. Dotted lines indicate fold-lines; 3 required.

5. Insert coil form from Step 4 into previously prepared heads from Steps 2 and 3.

6. Bend flaps OUTSIDE of heads (end-plates), and glue.

7. Place a 3/4" square piece of wood x 2" long through the 2 large end-plates (for power xfrmr.).

8. Place 2 strips of adhesive tape over the coil form.

9. Place the first turn of #26 enamelled wire through the INNER SMALL notch to the right in sketch: wind 807 turns.

10. Bring the end of this winding through the small notch of the other end. This is the PRIMARY winding.

11. With 2 sheets of heavy manila paper, wrap PRI winding so that the edges lap the inside of the end-plates.

REX B-ELIMINATOR CONSTRUCTION DETAILS Sht. 6

12. Bring the beginning of the SEC winding through the upper long notch, and wind 1,614 turns.

13. Bring the end through the upper long notch of the other end.

14. Connect the beginning of the SEC winding to the lug that also holds the end of the PRI winding.

15. Place 2 sheets of heavy manila paper over the SEC winding, again lapping the insides of the end-plates.

16. With #18 DCC wire, bring the beginning of the FILAMENT winding to the long notch on the same side as the PRI and SEC lug.

17. Wind 44 turns, then bring end directly to the lug opposite the SEC lug.

18. Solder all leads.

19. Wrap completed windings in leatherette and glue.

20. Check to see that you have 4 lugs carrying the beginning and end of PRI winding on the bottom, and the beginning and end of the SEC winding. The lugs opposite the SEC lugs carry the FIL winding.

21. Have the 128 laminationa at hand.

22. Place the long leg of one lamination into the LH side of the form.

23. Place another lamination with the long leg on the RH side.

24. Place another lamination with the short leg over the short leg of the first (Step 22) lamination.

25. Take 4 laminations and place the long legs to the RH side of the form. The short legs of these laminations should fall over the short legs of lamination 3.

26. Take 4 more laminations and alternately installing pattern.

27. Continue alternating 4 laminations until 32 sets are used.

28. Place a single lamination over the first 3 laminations placed in the form (Steps 22, 23, 24).

REX B-ELIMINATOR CONSTRUCTION DETAILS Sht. 7

29. Attach the angle brackets ("Feet") via the bottom holes of the laminations.

30. Secure laminations through the top holes with a bolt, being certain to torque securely.

31. The 2 chokes are constructed in exactly the same way, with 8,000 turns of #26 enammelled wire.

32. Upon completion, check both chokes and power xfrmr. for continuity and shorts.

33. It was the fashion in the early days to paint such items a dull black.

While there were minor deviations from the above instructions for other choke and xfrmr. construction, the above may be considered as representative of what was involved in winding your own, in those far away days. Oddly enough, many a home-constructed transformer worked very well - I have a couple on my shelves, made by some enthusiastic soul in the Twenties, which still perform as they were meant to, even though they do have a tendency to get hot.

There were also articles telling you how to compute the ratio of AF xfrmr. windings, and construction details for the same, but all were essentially the same. The steps one had to go through were as I have described them above. Winding your own RF, ANT, or SW coils was a lot easier, and more or less predictable. Winding your own power xfrmrs. and power chokes was frequently an adventure.

* * *
* *
*

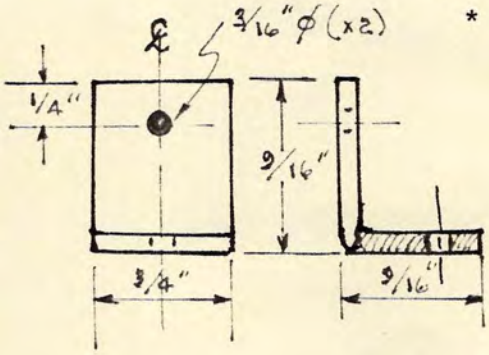

FOOT DETAILS

(8 Req.)

Brass Stock .064"

TUNGAR BATTERY CHARGER CIRCUIT, 1922

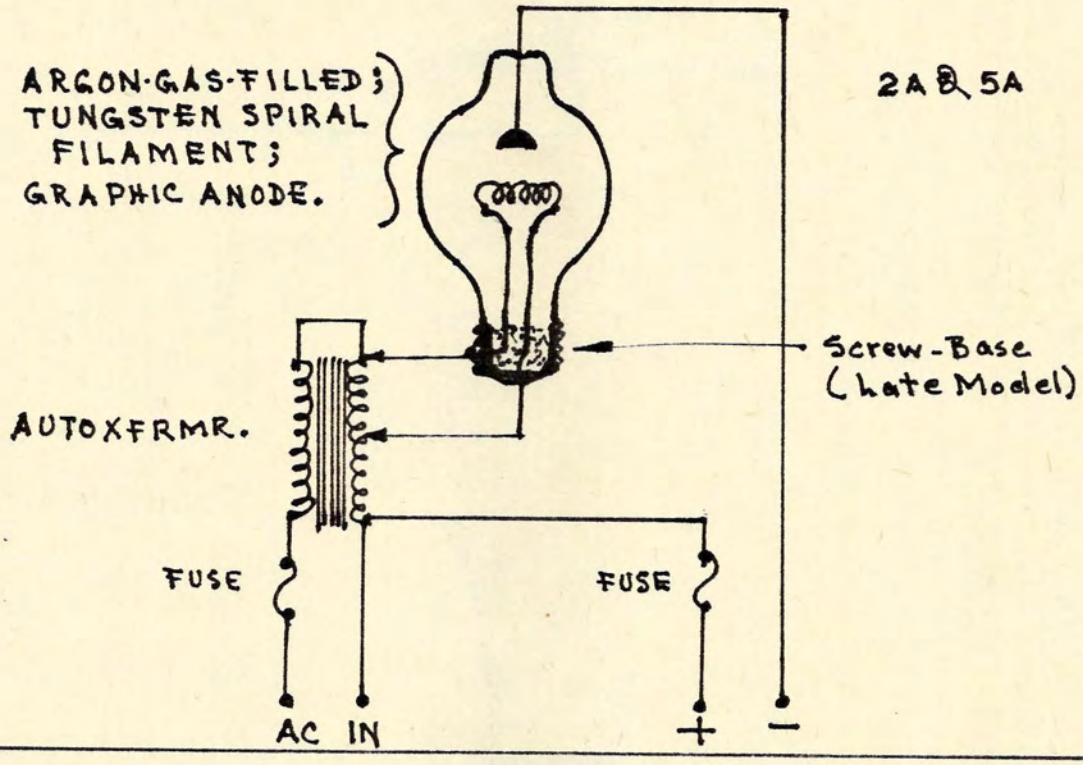

EARLY MERCURY-ARC RECTIFIER HOOK-UP

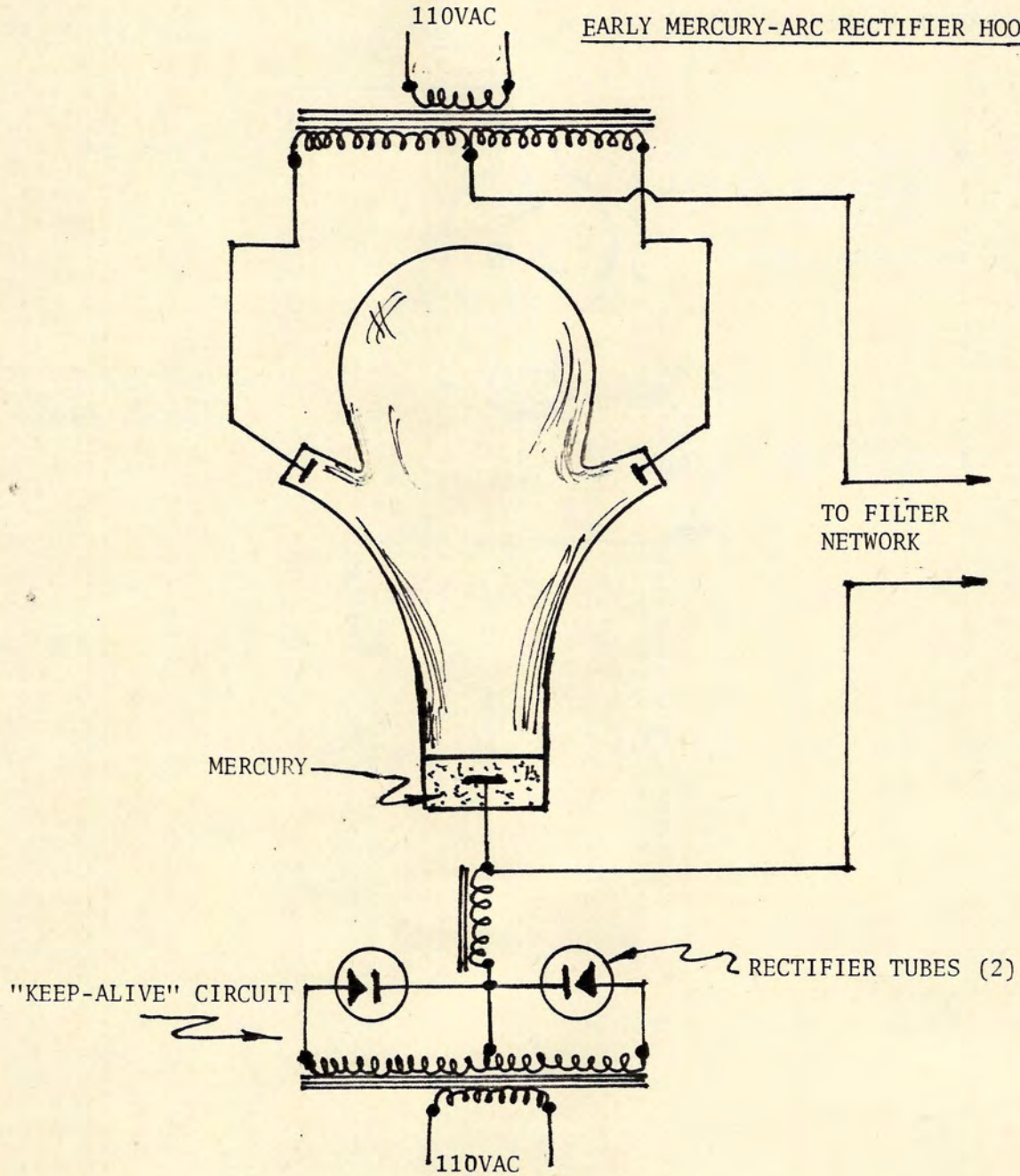

NOTES: 1) Lower end of tube kept in a bath of light oil.
2. Rectifier tubes could be of the "Tungar" type, or any two electrolytic rectifiers made-up in (2) half-gallon jars containing a Borax solution, aluminum, and lead electrodes.

SINGLE CIRCUIT NON-REGENERATIVE RCVR., 1922

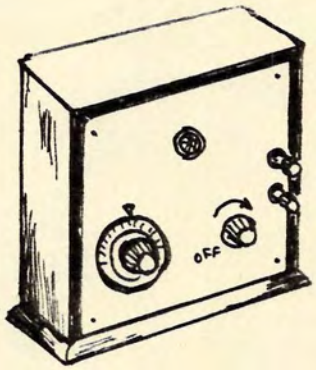

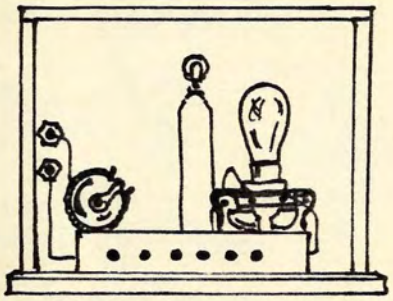

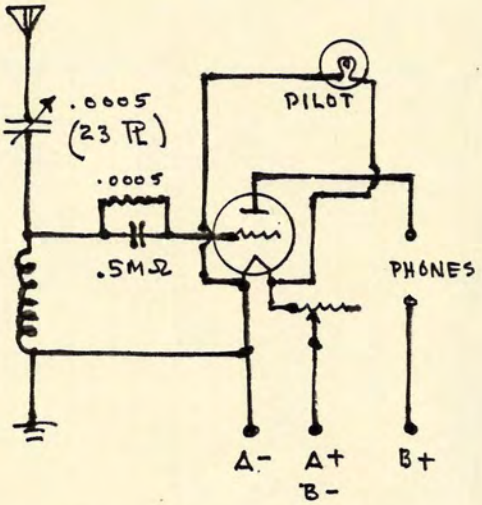

COIL DATA:

Form = 3"Ø x 3".
45 T, #28 Enamelled Wire.

Grid-leak attached to Coil.

Terminal Strip = 1" x 6" x ¼".

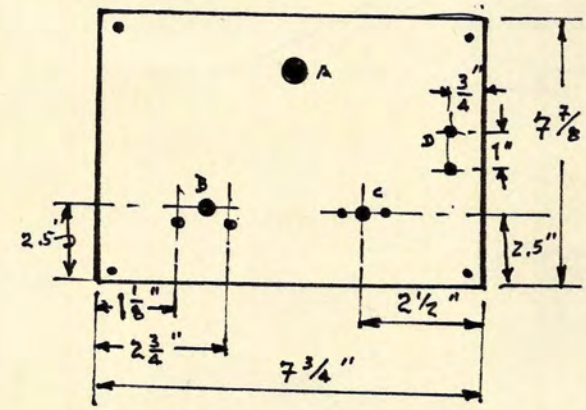

HOLES A = 19/32" Ø
B = 5/16" Ø
C = 6/32" Ø
D = 8/32" Ø

PANEL LAYOUT

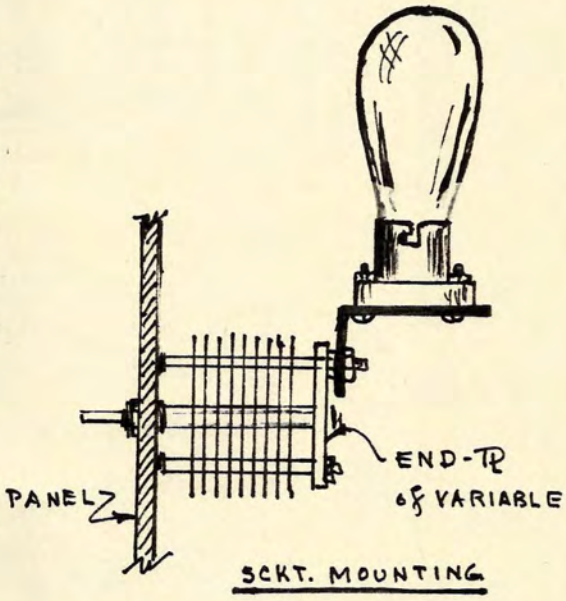

SCKT. MOUNTING

CONVENTIONAL VARIOMETER CONNEXIONS

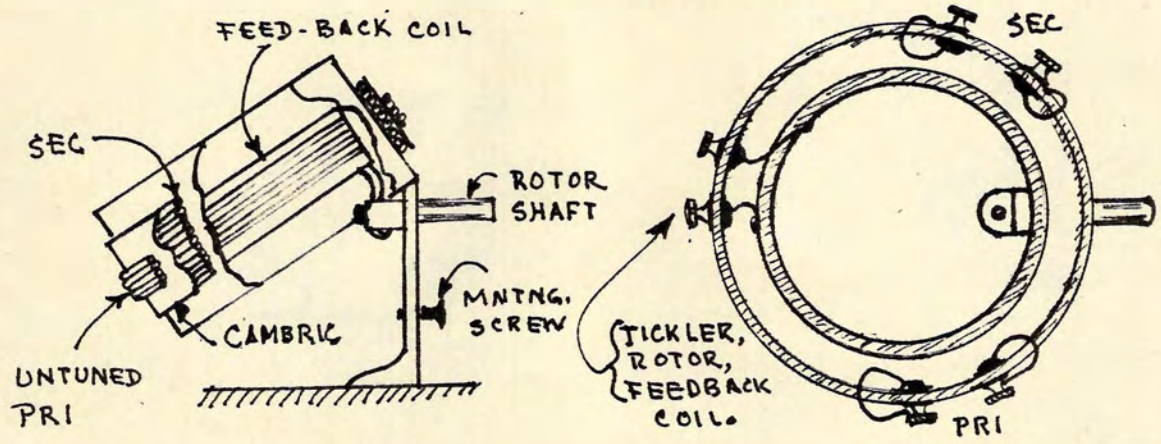

SIZE & NO. (GAUGE) OF WIRE DETERMINED BY APPLICATION.

THE "HELIPHONE" POCKET RECEIVER, 1922:$5

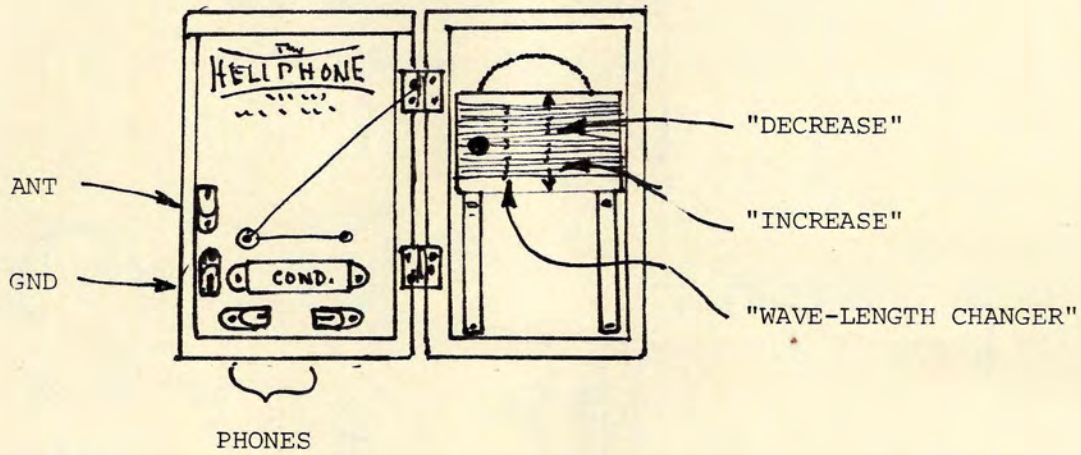

One of the first commercially feasible "pocket" radios, measuring 6" x 8" x 1½". This was a crystal set, naturally.

Originally designed by Gardner-Rodman Corp. of New York City, and distributed by RADISCO CO. of Newark, New Jersey.

Wave-Length changer was a sliding inductance, as was the fashion of the time.

REGENERATION NOTES

Single tube short-wave receivers were almost always of the regenerative type. This circuit yielded maximum gain per tube, and this gain was the same, regardless of how ingenious the scheme for controlling the regeneration.

A triode, tetrode, or pentode gave exctly the same maximum gain via regeneration. The gain was constant, regardless of whether the tickler was connected to the grid or the plate circuit, and coupled to the control-grid circuit; or whether feedback was via grid-plate capacity, as with a triode.

No amount of wildly flung claims could ever increase regeneration gain. The theoretical maximum gain in a regenerative stage is infinite, but the practical limit of gain depends solely on how close you can bring the tube to oscillation.

One advance over the early regenerative circuits would be to place a good high-ratio tuning dial on the regeneration control.

CLASSIC REGENERATION CIRCUITS:

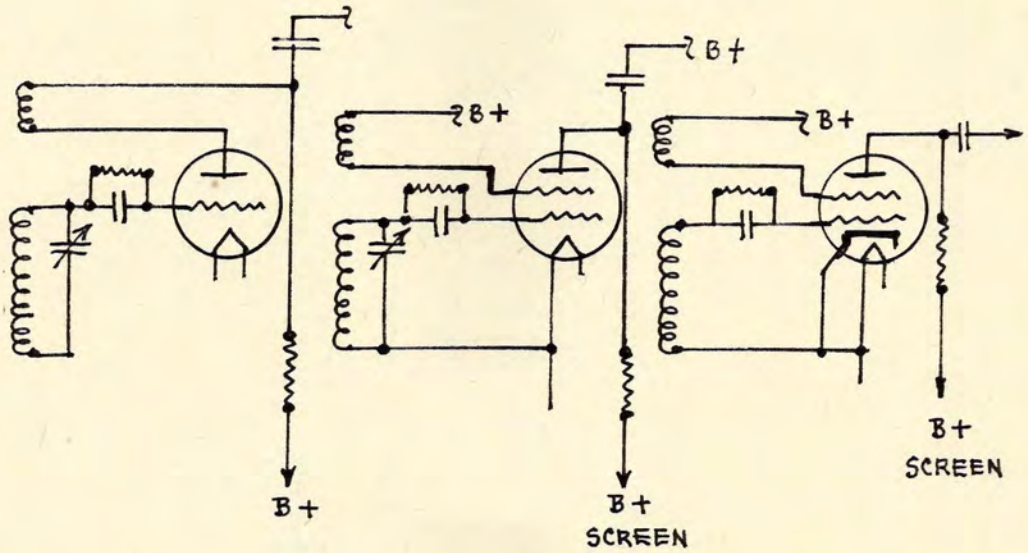

TUNING A HONEYCOMB COIL SET

The wavelength of each coil is varied by means of a variable condenser, rather than through an inductance switch. If the 3rd coil (TICKLER) is not shunted, it should be - a 23-plate size was proper.

The PRIMARY coil was usually a 43-plate variable condenser in series with the aerial. The SECONDARY coil was shunted by a 23-plate condenser, and a vernier control was recommended.

Set PRI coil at any point between 0 and 50.
Set SEC coil at 0.
Set TICK at any point where regeneration occurs.

Preliminary tuning is done with SEC condenser only!

Turn SEC condenser slowly across dial until signal is heard. The farther out the PRI coil is moved from the SEC coil, the sharper the general tuning becomes, with the necessary adjustment of the PRI.

Current flow through all three coils should be in the same direction. Use a small compass as a current indicator by placing a small compass inside each coil, one at a time, and shorting the coil with a WEAK current. Be certain coil plugs are well-seated, without corrosion, and that the "A" battery is well-grounded.

For BC stations over 500 meters, use 35,75 & 50-turn coils - in that order. When it is necessary to move SEC and TICK coils too close to 0, substitute the next larger size of coil. If the PRI series condenser has to be moved too close to 0 to pull in a signal, substitute the next smaller size of coil, and advance the condenser dial.

A short, low aerial allows greater selectivity for distant stations. Otherwise, a conventional aerial of 150-ft., 60-ft. high serves.

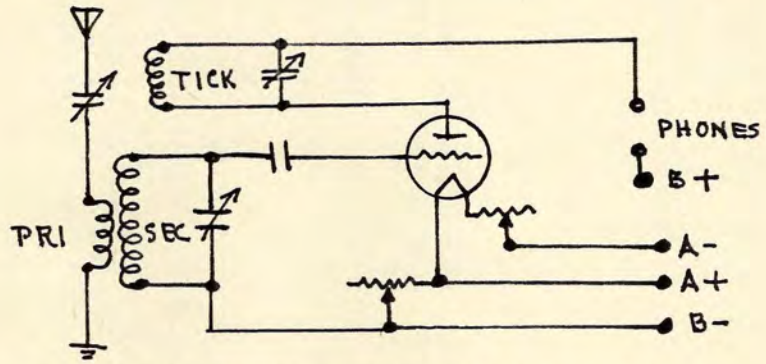

FUNDAMENTAL HONEYCOMB COIL WIRING DIAGRAM

USEFUL HONEYCOMB COIL DATA

TABLE A

Wave-length range of various coils with standard Variables, such as: 100 MMF (43 Plates); 500 MMF (23 Plates); 250 MMF (11 Plates). Wave-length is in Meters with Variables connected in parallel.

No. Turns	100MMF	500MMF	250MMF	10MMF**
25	372	267	193	131
35	528	378	277	188
50	743	537	392	270
75	1007	770	560	279
100	1470	1055	771	532
150	2160	1546	1110	746
200	2870	2050	1470	980
250	3910	2800	2020	1355
300	4900	3490	2510	1670
400	6160	4400	3168	2095
500	8070	5750	4140	2740
600	11,600	8300	5980	3980
750	13,300	9500	6830	4540
1000	17,600	12,500	9000	5950
1250	20,100	14,300	10,250	6780
1500	24,200	17,200	12,350	8170

** = The value of 10MMF is taken as the approximate capacity of a SEC circuit when the Variable is at MINIMUM capacity.

TABLE B

NUMBER OF TURNS OF PROPER HONEYCOMB COILS vs. WAVE-LENGTH.

Meters	PRI	SEC	TICKLER
25-150	25	25	35
200-350	25	35	50
300-650	50	75	100
400-850	75	100	150
250-500	35	50	75
800-1850	150	200	150
1500-2750	200	300	200
4000-6350	300	400	300
6200-42,500	400	750	400
13,000-20,000	750	1250	400
18,000-25,000	1250	1500	500

It is possible to reach lower wave-lengths than shown by placing less turns on the coils, but is not advisable.

CRYSTAL RADIOPHONE, 1922

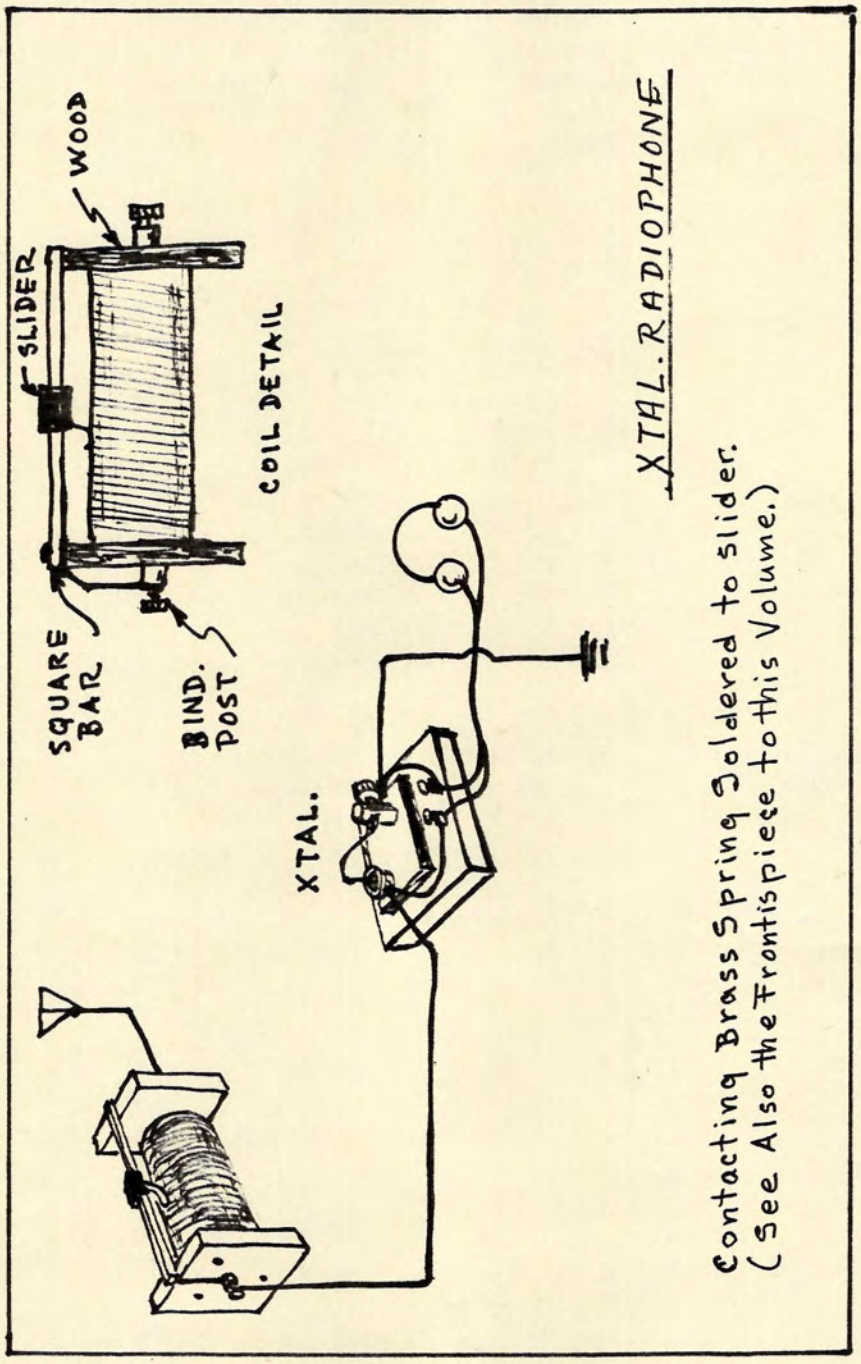

FLEWELLING's 1-TUBE CIRCUIT, 1922

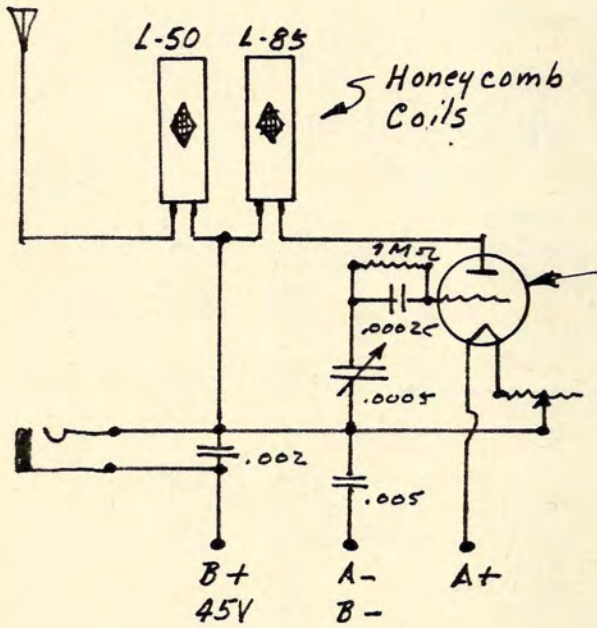

A CANADIAN VERSION of FLEWELLING's 1-TUBE RECEIVER •1922•

Northern Electric's "Peanut Tube"

Coils could be Remler, Cota, R.E.L., or equal, w/ Turns Shown.
L-50 = 50 Turns
L-85 = 85 Turns

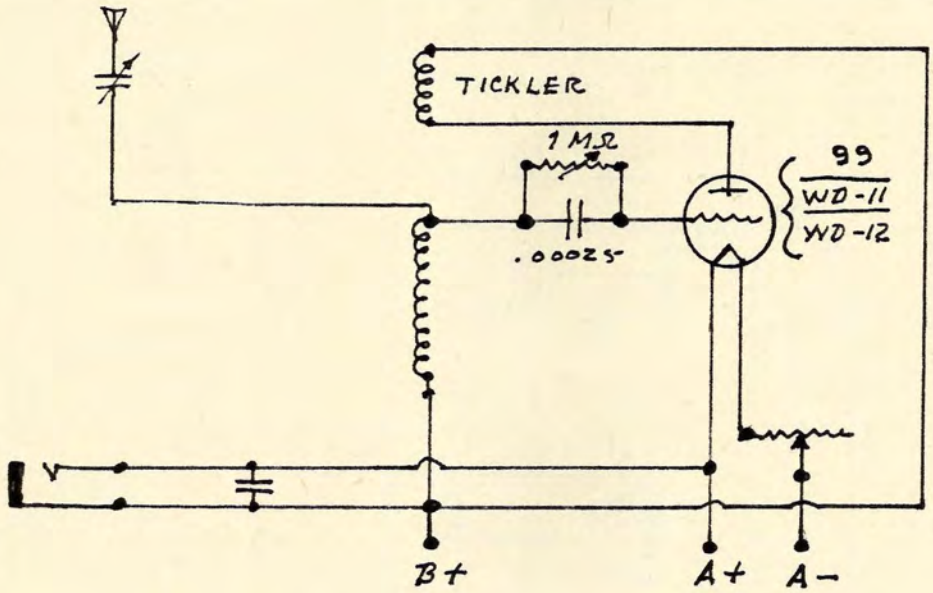

(1922) THE ORIGINAL FLEWELLING 1-TUBE CIRCUIT

The Armstrong super-regen. principle, but using the blocking effect of the tube via a critical Grid-Leak.

(RD)

FLEWELLING SUPER-REGENERATIVE

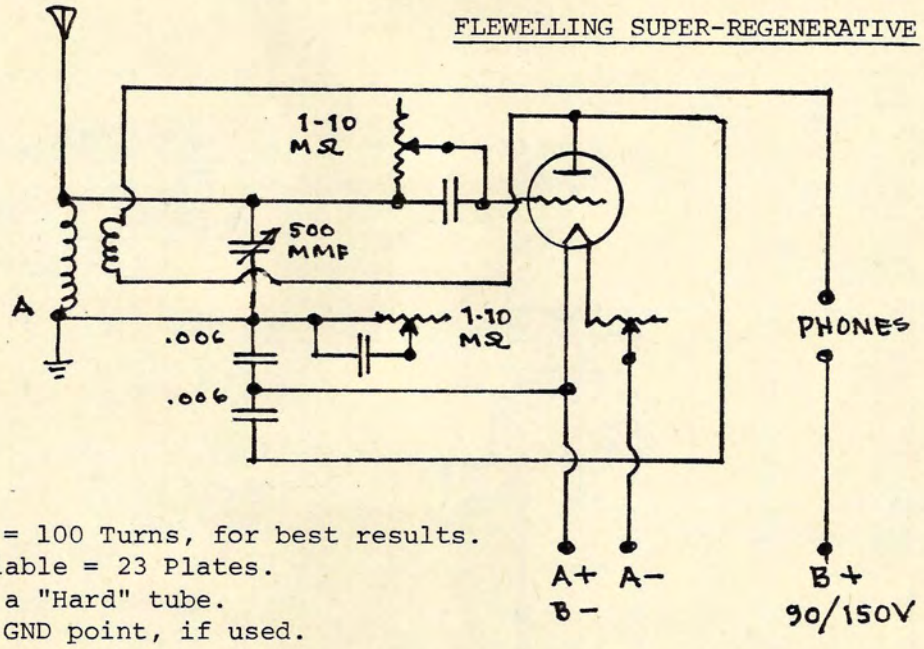

SEC = 100 Turns, for best results.
Variable = 23 Plates.
Use a "Hard" tube.
A = GND point, if used.

SIMPLIFIED FLEWELLING

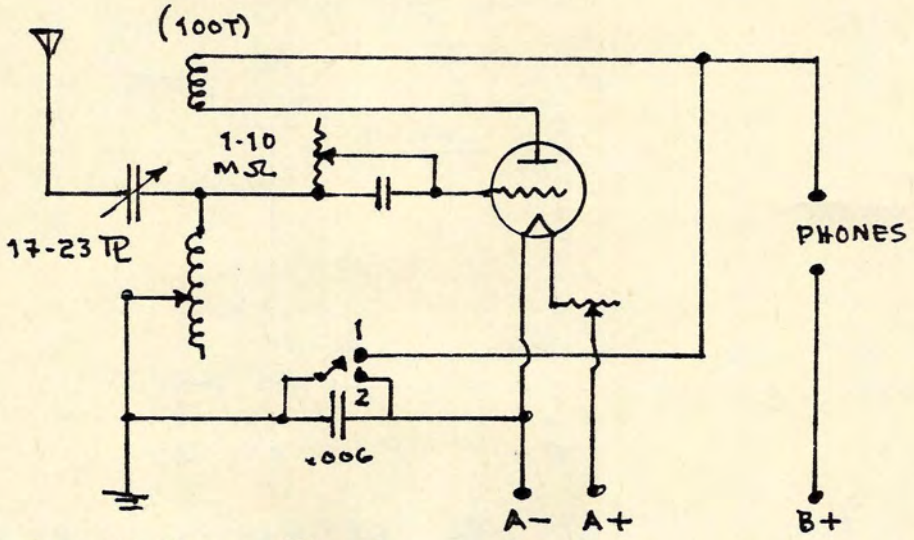

SW. 1 = Super-Regen.
SW. 2 = Single-Circuit.

FLEWELLING ONE-TUBE RECEIVER, 1923

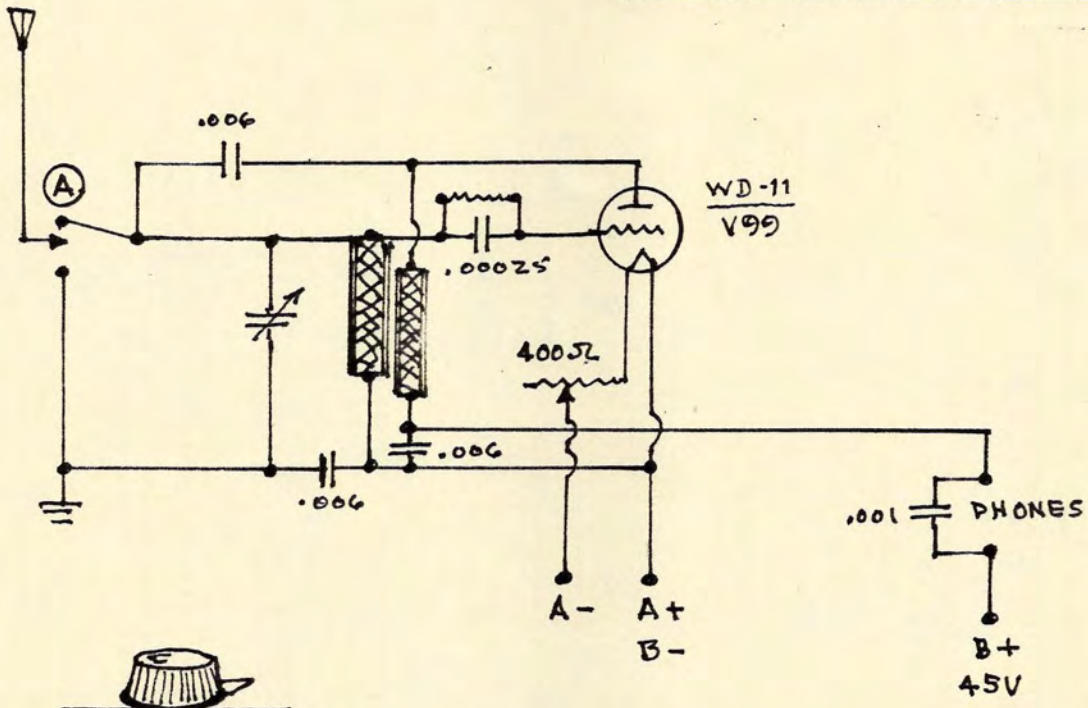

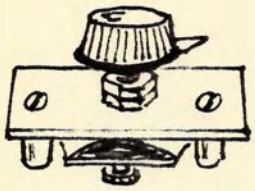

CRL#106 ADJUSTABLE GRID-LEAK (35¢)

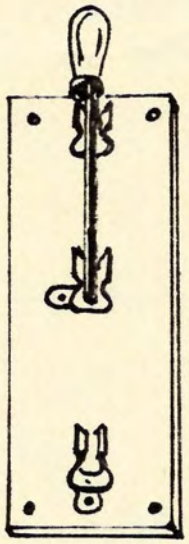

A

KNIFE-SWITCH IN ANT CIRCUIT

(CB 11-23)

REMLER/COTA-type Honeycomb coils were used, with mounts.

Potentiometer = CRL 400-ohms #110 ($1.75).

GRID-LEAK was a resistor constructed of a fabric strip impregnated with a high resistance compound.

This was one of Flewelling's earlier circuits, which is rather curious upon analysis.

WAVE-TRAP CIRCUITRY, 1923

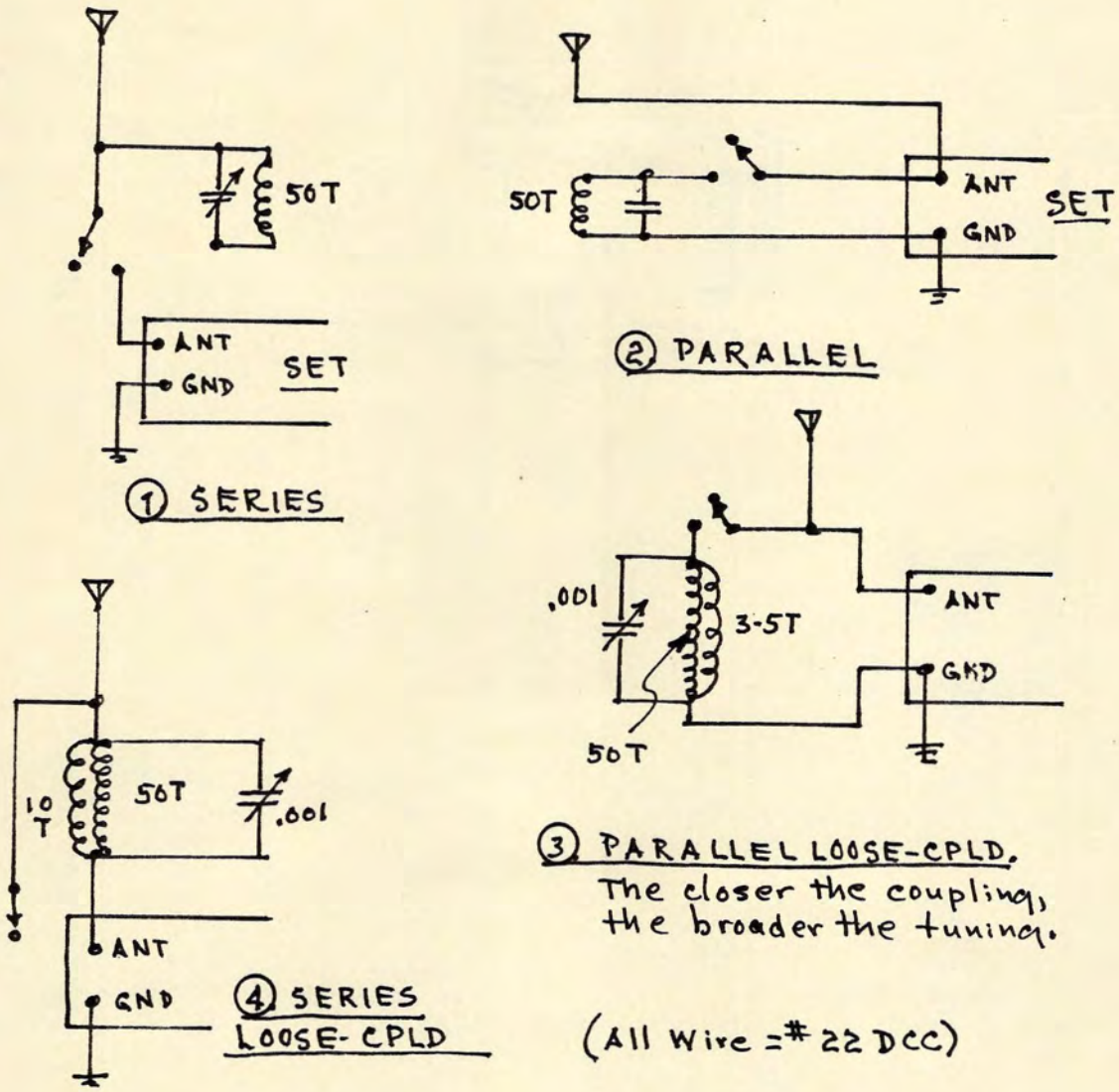

Early wave-traps were ineffectual at short distances, although at 6 miles or more from a broadcasting station, they worked rather well. These wave-traps were usually a coil of 50 turns, shunted by a .001 variable condenser, placed in series with the ANT, as Fig. 1. General Radio offered what many considered the best, as follows: 3" Ø form, 40T, #22 DCC; .001 Variable; #18 bell-wire wound over the 40T winding, tapt @ 3,5,8 turns, and short circuit. It was calibrated in wavelengths.

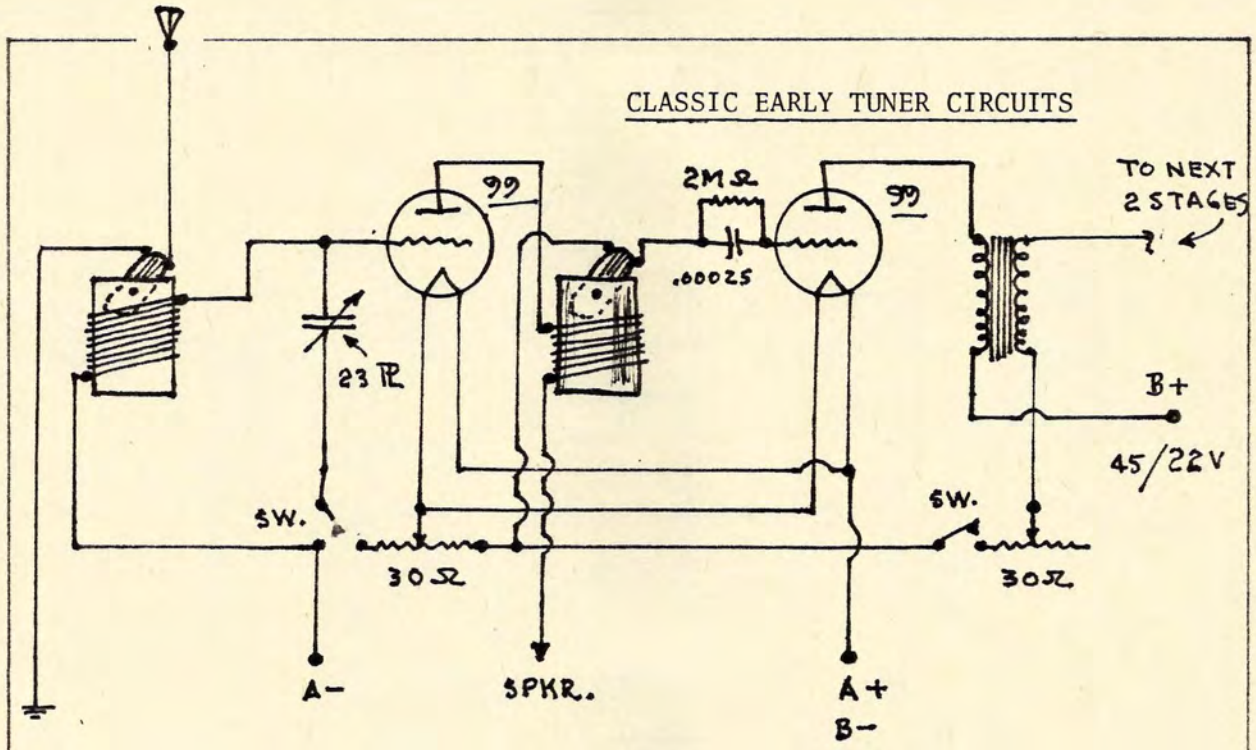

Variable grid-leak; vernier dials mandatory for this set. A midget variable across the Tickler may help.

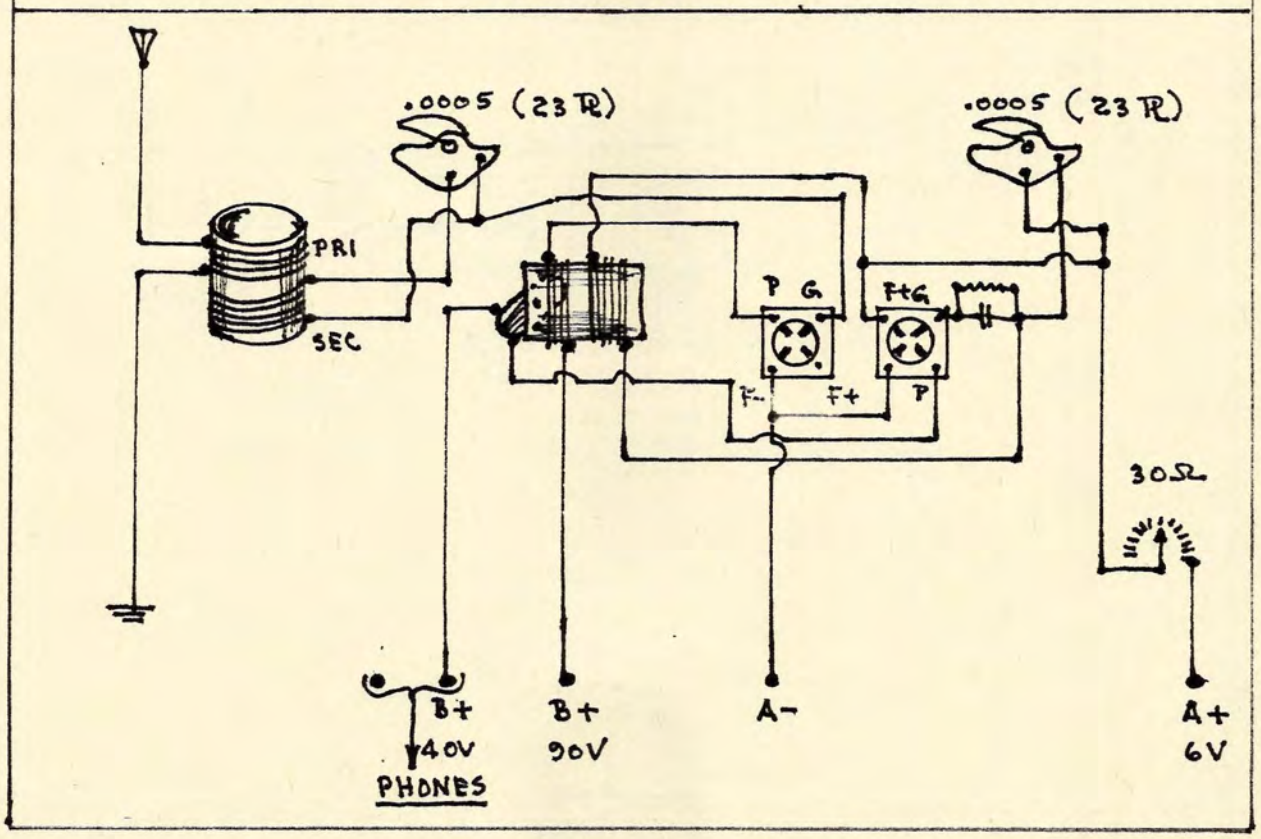

THREE-CIRCUIT TUNERS, 1923

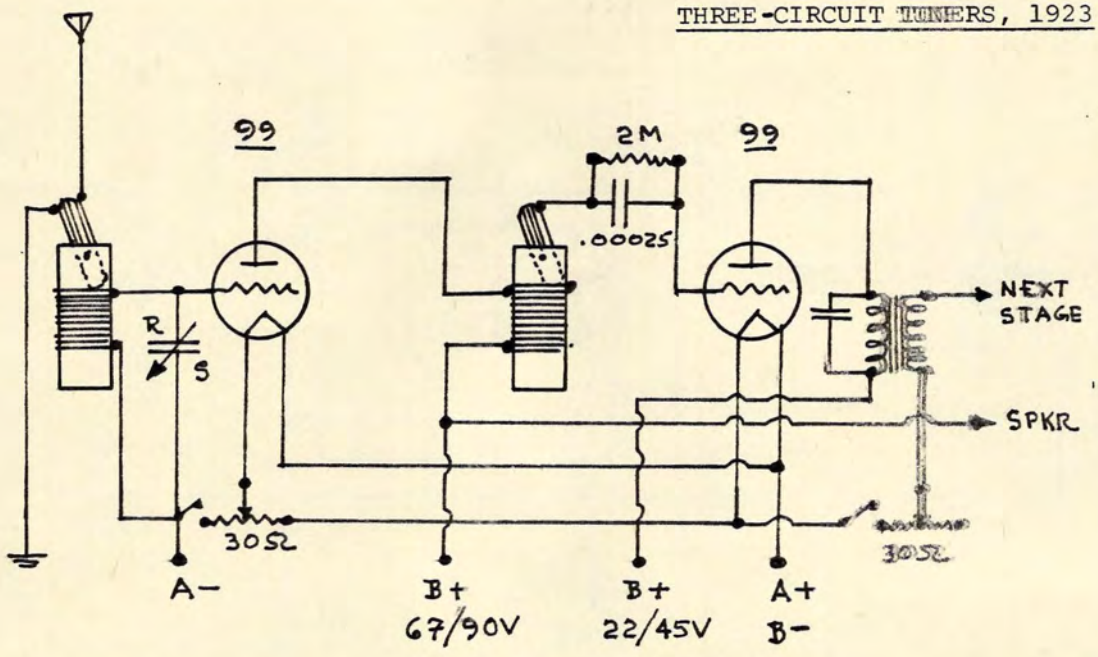

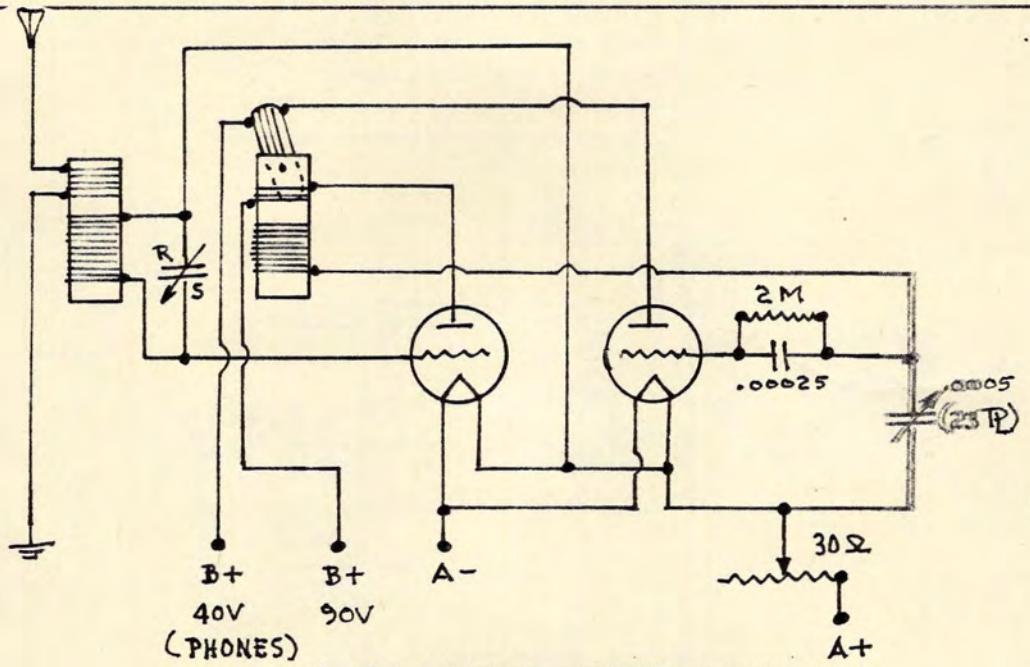

An 11-plate midget variable across the Tickler may improve reception.

Grid-Leak should be variable

THREE CIRCUIT TUNERS NOTES

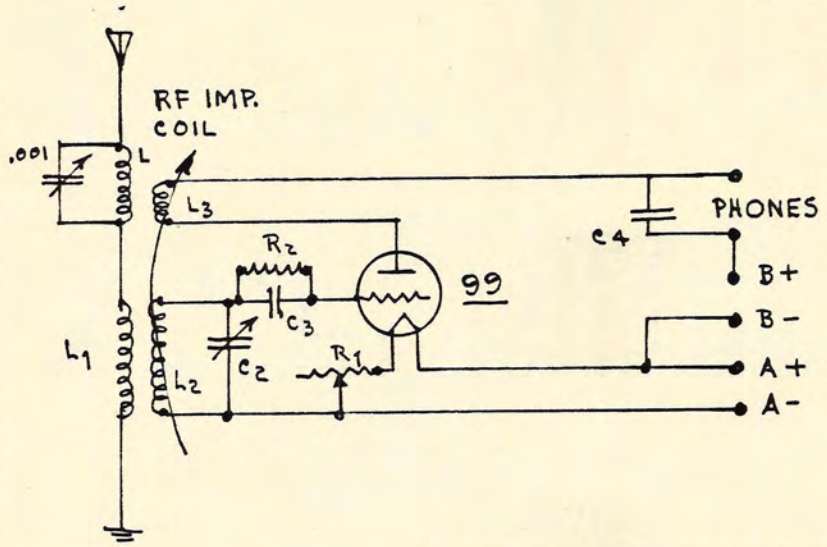

L_1, L_2, L_3 = 3-CIRCUIT
C_2 = .0005 MFD
C_3 = .00025
C_4 = .00025
R_1 = 20 Ω
R_2 = 5 MΩ
5-WIRE CABLE
4.5V "A" or "C" BATT.
45V "B" BATTERY
(2) VERNIER DIALS

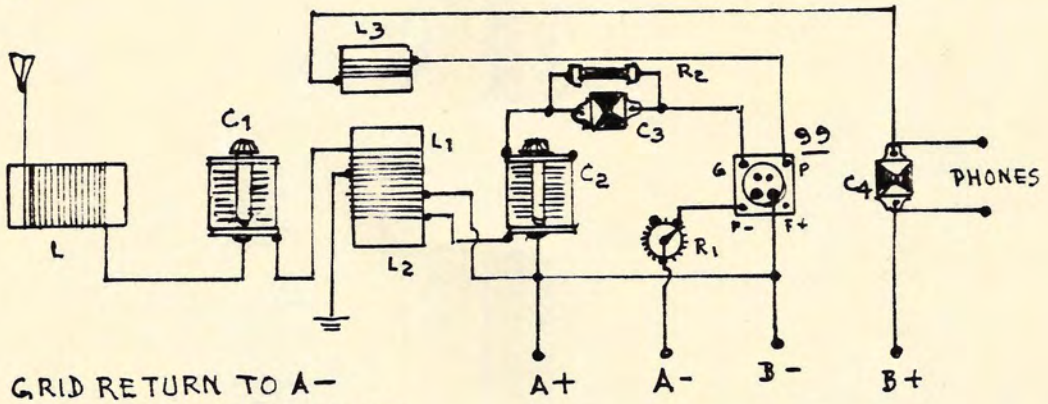

GRID RETURN TO A-
WILL SOMETIMES HELP.

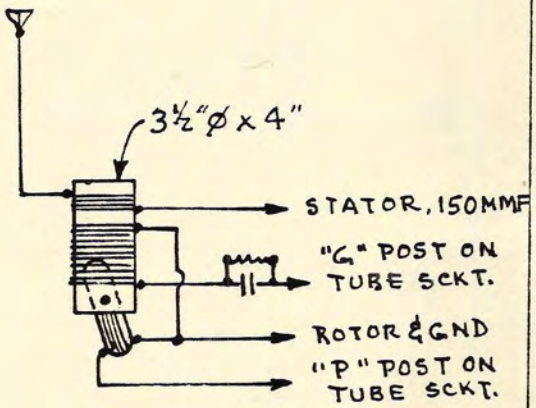

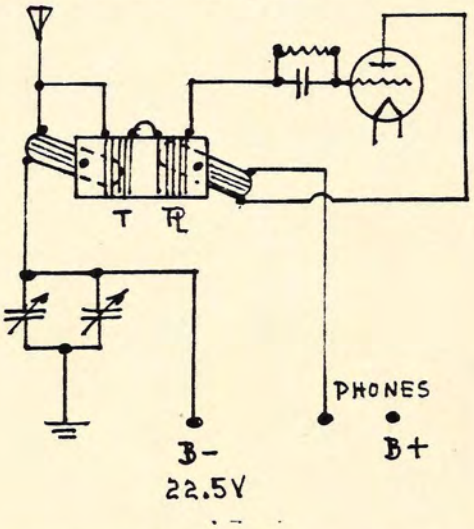

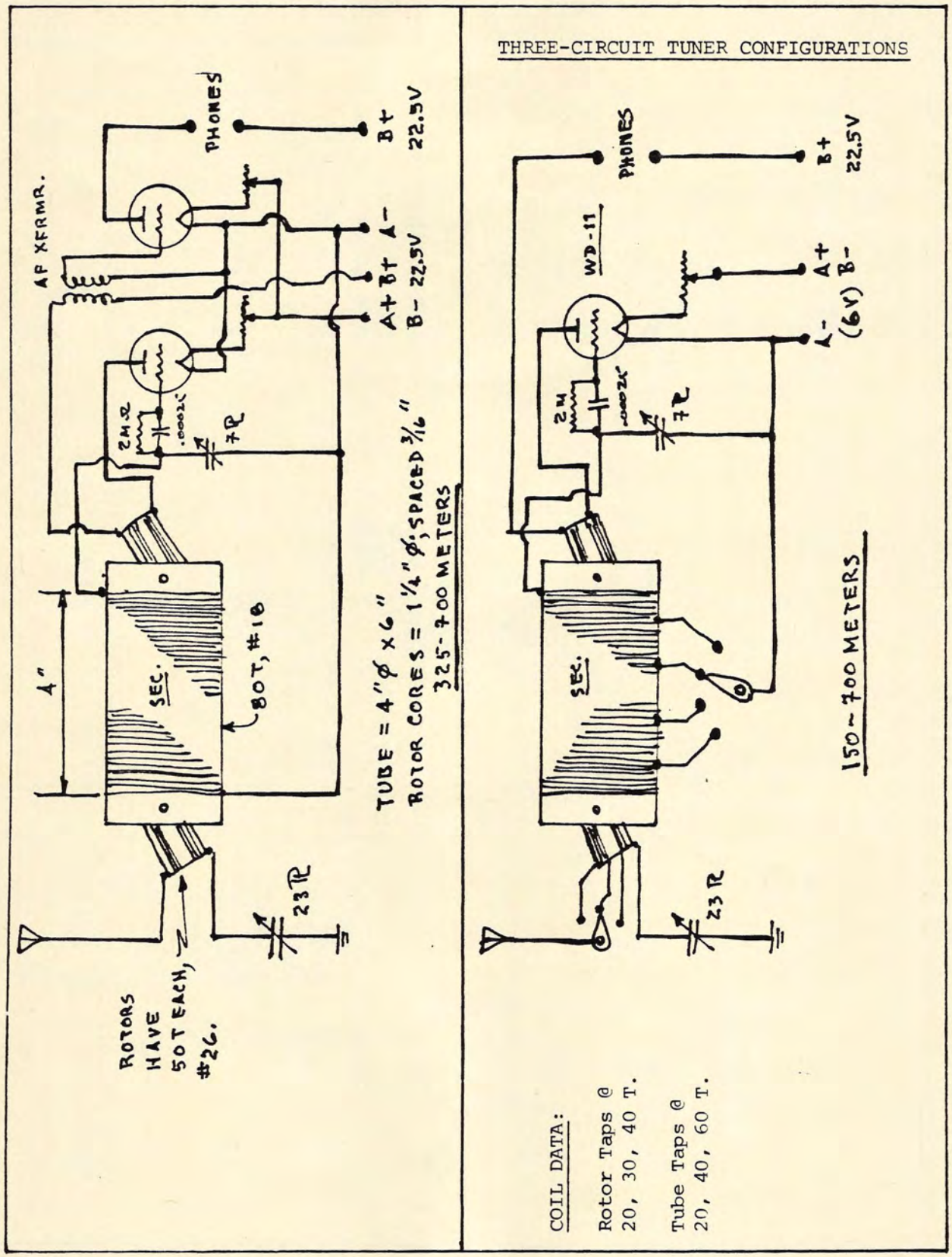
THREE-CIRCUIT TUNER CONFIGURATIONS
AF XFRMR.
PHONES
B+ 22.5V
A+ B+ A-
B- 22.5V
2MΩ
.0002
7R
4"
SEC.
BOT, #18
23R
ROTORS HAVE 50T EACH, #26.
TUBE = 4"Ø x 6"
ROTOR CORES = 1¼"Ø, SPACED 3/16"
325-700 METERS
WD-11
PHONES
B+ 22.5V
A+ B-
A- (6V)
2M
.0002
7R
SEC.
23R
150-700 METERS
COIL DATA:
Rotor Taps @ 20, 30, 40 T.
Tube Taps @ 20, 40, 60 T.

A 3-CIRCUIT TUNER OF 1922

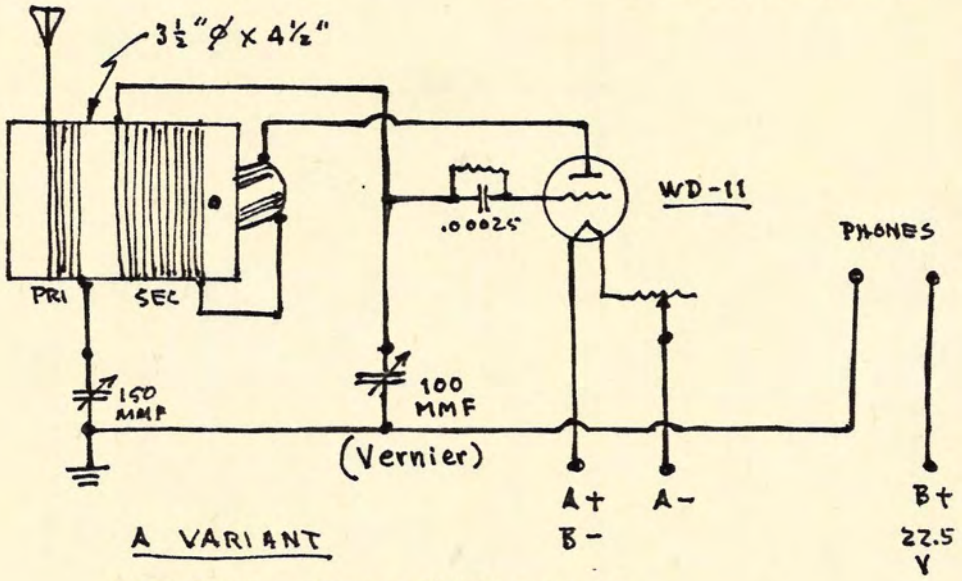

A VARIANT

COIL DATA: Form = 3½" Ø x 4" Lg.
PRI = #18 DCC, 21 Turns.
Sec = #18 DCC, 53 Turns.

LOW POWER MODULATED C.W. XMTR., 1920

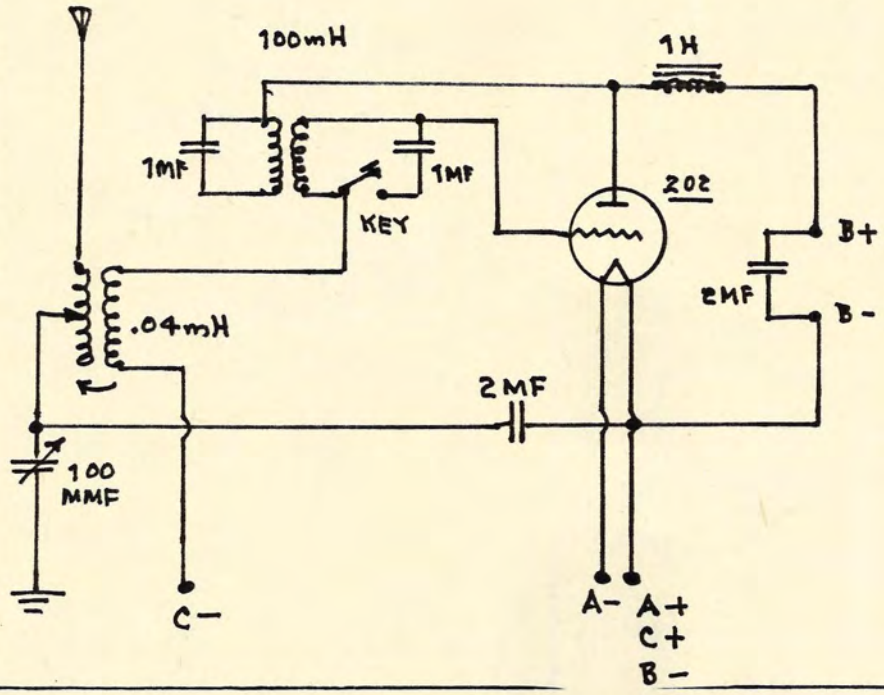

THREE-CIRCUIT TUNER CONFIGURATIONS

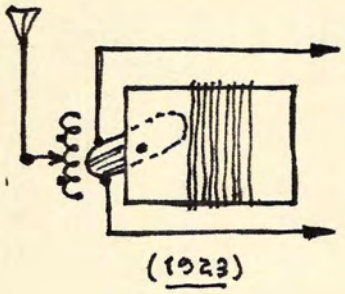

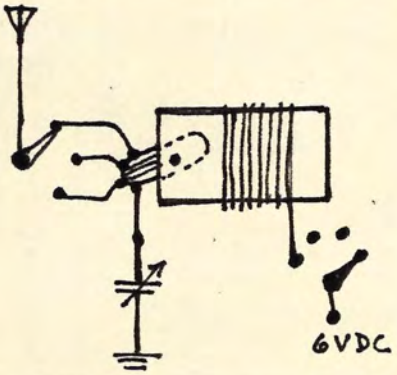

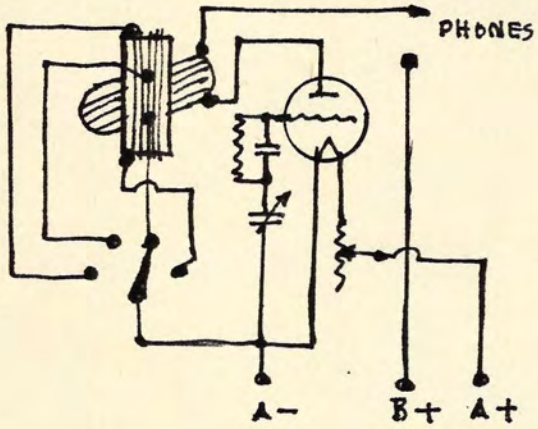

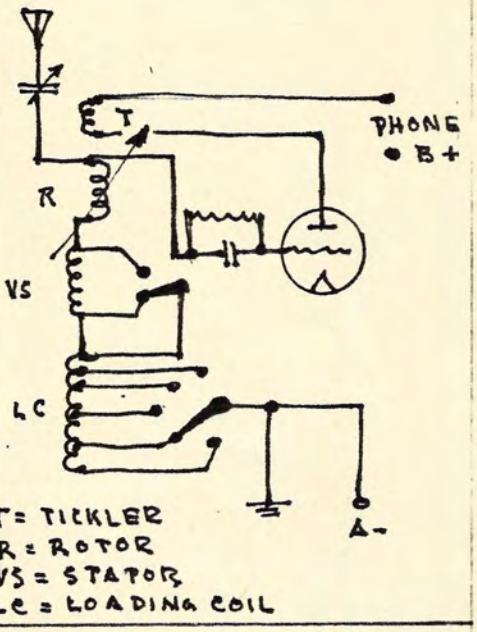

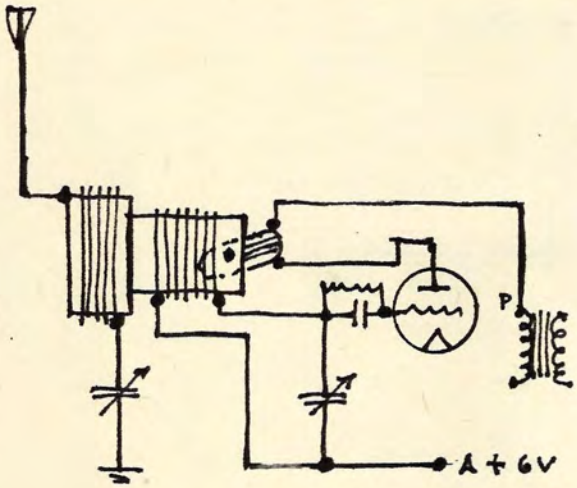

NATIONAL RADIO HOOK-UPS, 1923

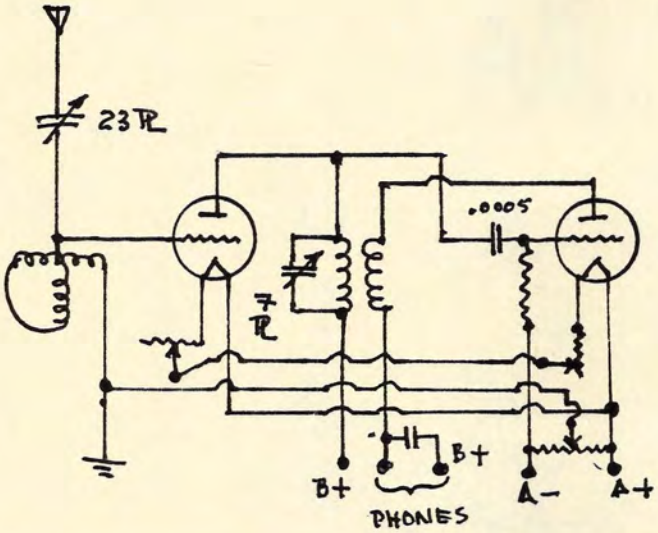

SINGLE CIRCUIT
REGENERATIVE
HOOK-UP

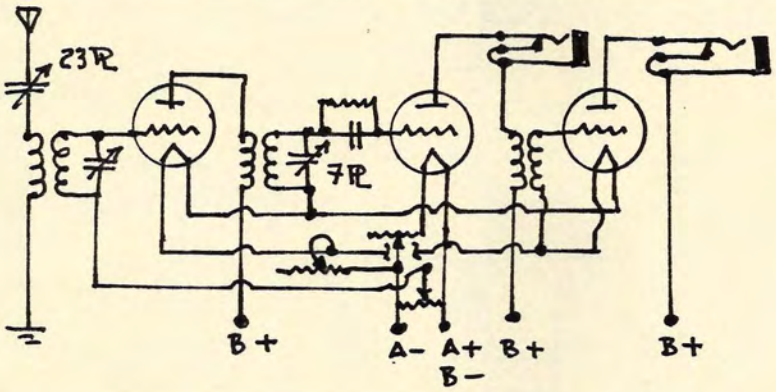

DOUBLE CIRCUIT
REGENERATIVE
HOOK-UP

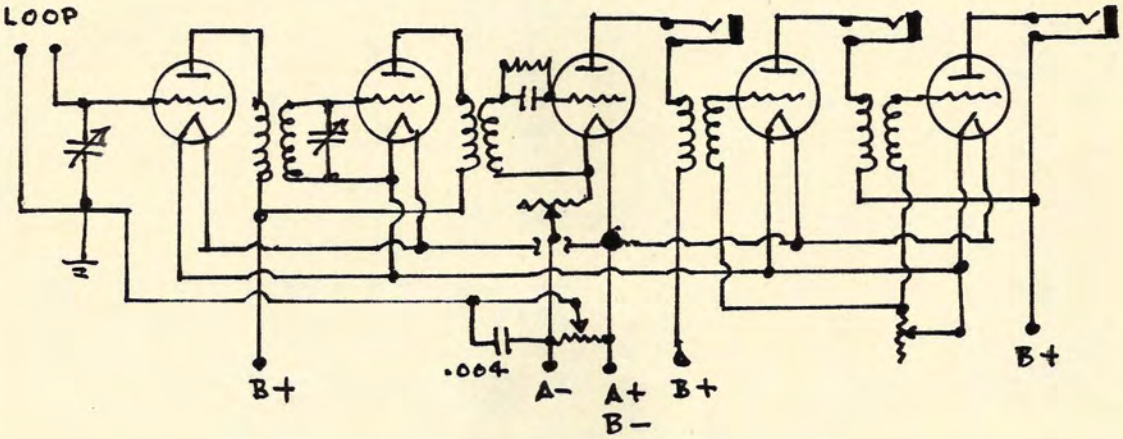

"TRANSOCEANIC INTERFLEX" SW. RCVR.

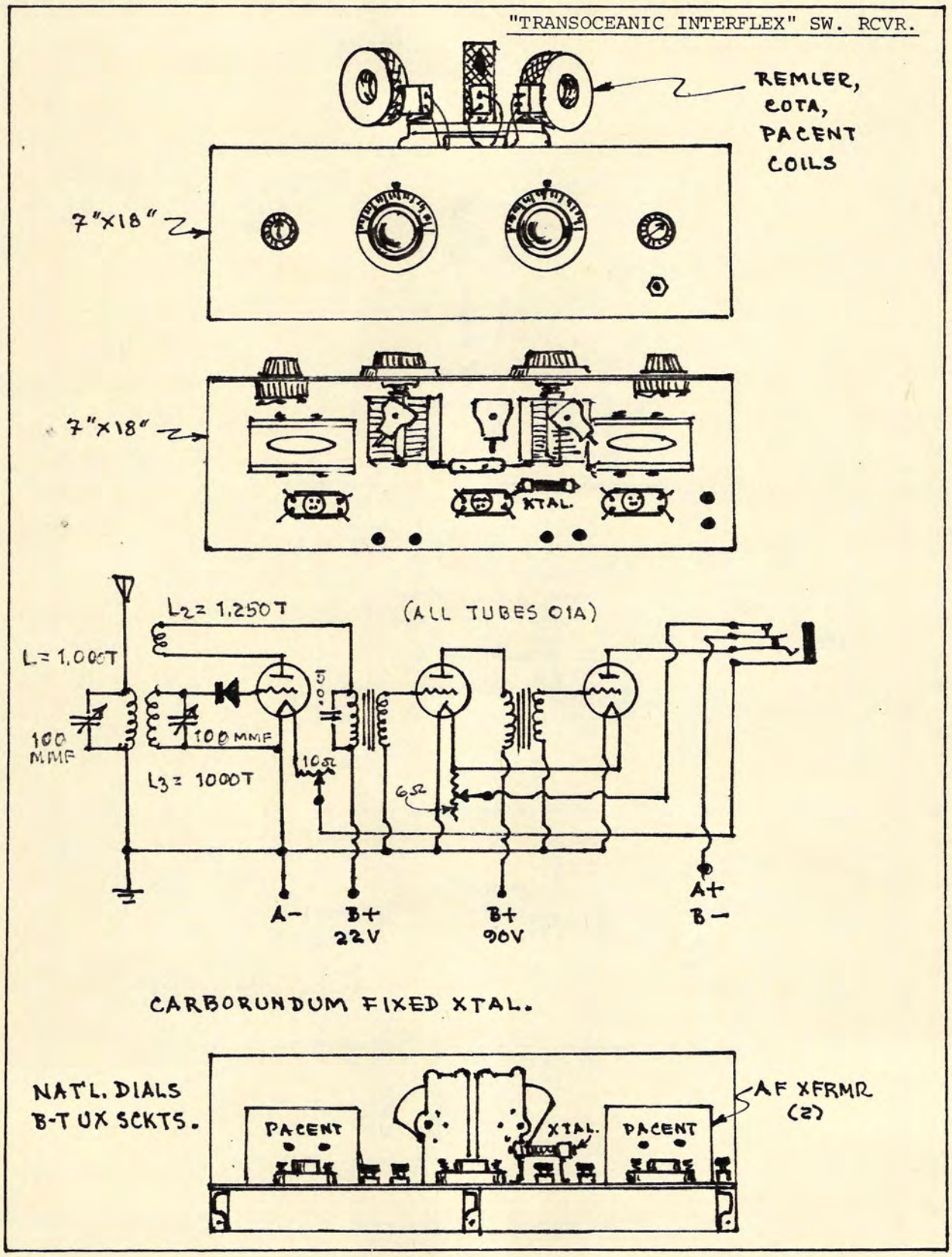

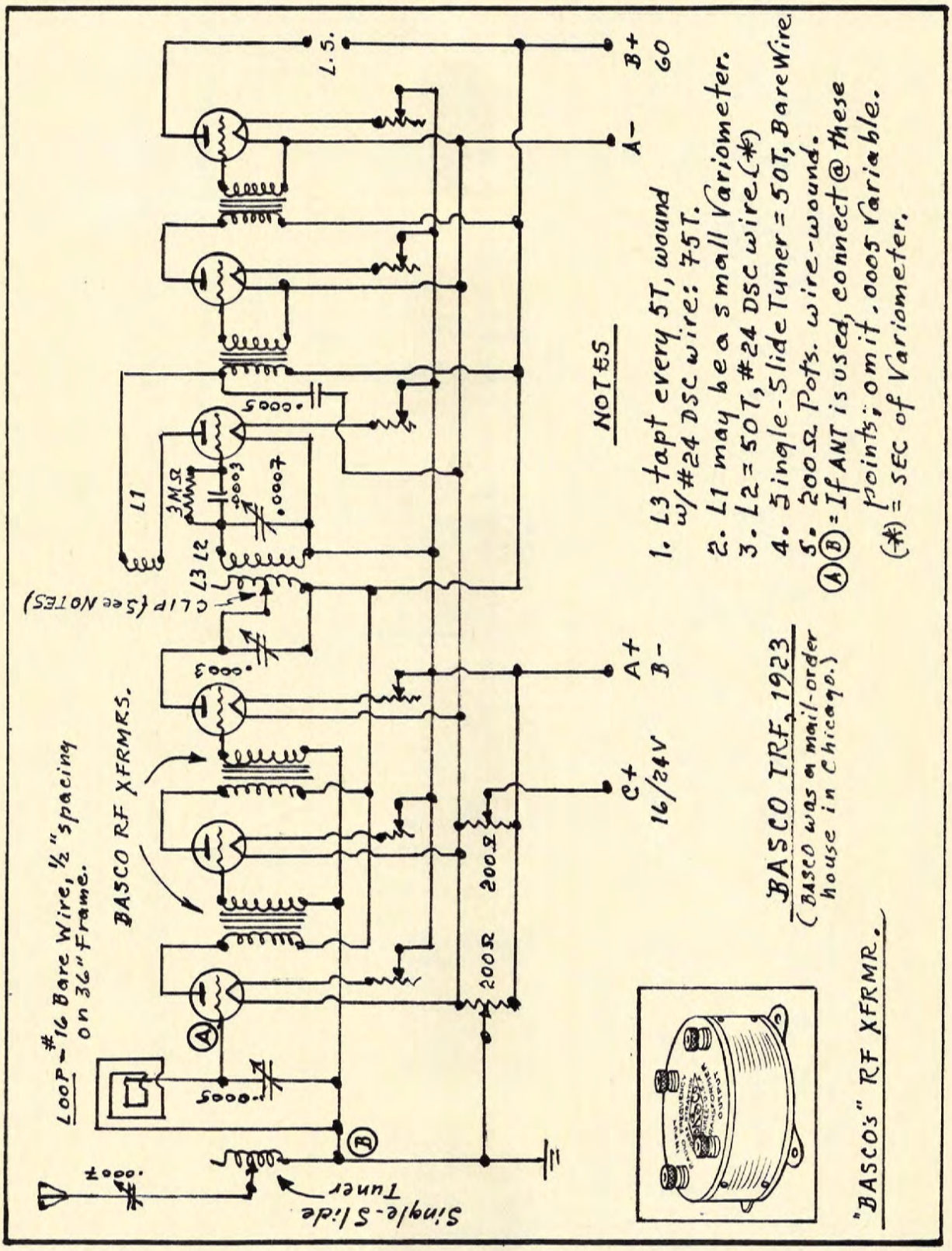
LOOP - #16 Bare Wire, ½" Spacing on 36" Frame.
BASCO RF XFRMRS.
Single-Slide Tuner
CLIP (See NOTES)
L1
L2
L3
3MΩ
.0007
.0005
.0003
200Ω
200Ω
L.S.
A+
B-
C+
16/24V
A-
B+
60
NOTES
1. L3 tapt every 5T, wound w/#24 DSC wire: 75T.
2. L1 may be a small Variometer.
3. L2 = 50T, #24 DSC wire (*)
4. Single-Slide Tuner = 50T, Bare Wire.
5. 200Ω Pots. wire-wound.
(A)(B) = If ANT is used, connect @ these points; omit .0005 Variable.
(*) = SEC of Variometer.
BASCO TRF, 1923
(BASCO was a mail-order house in Chicago.)
"BASCO's" RF XFRMR.

STIENITE WAVE-TRAP EXPLODED VIEW
(1924) ($1.00)

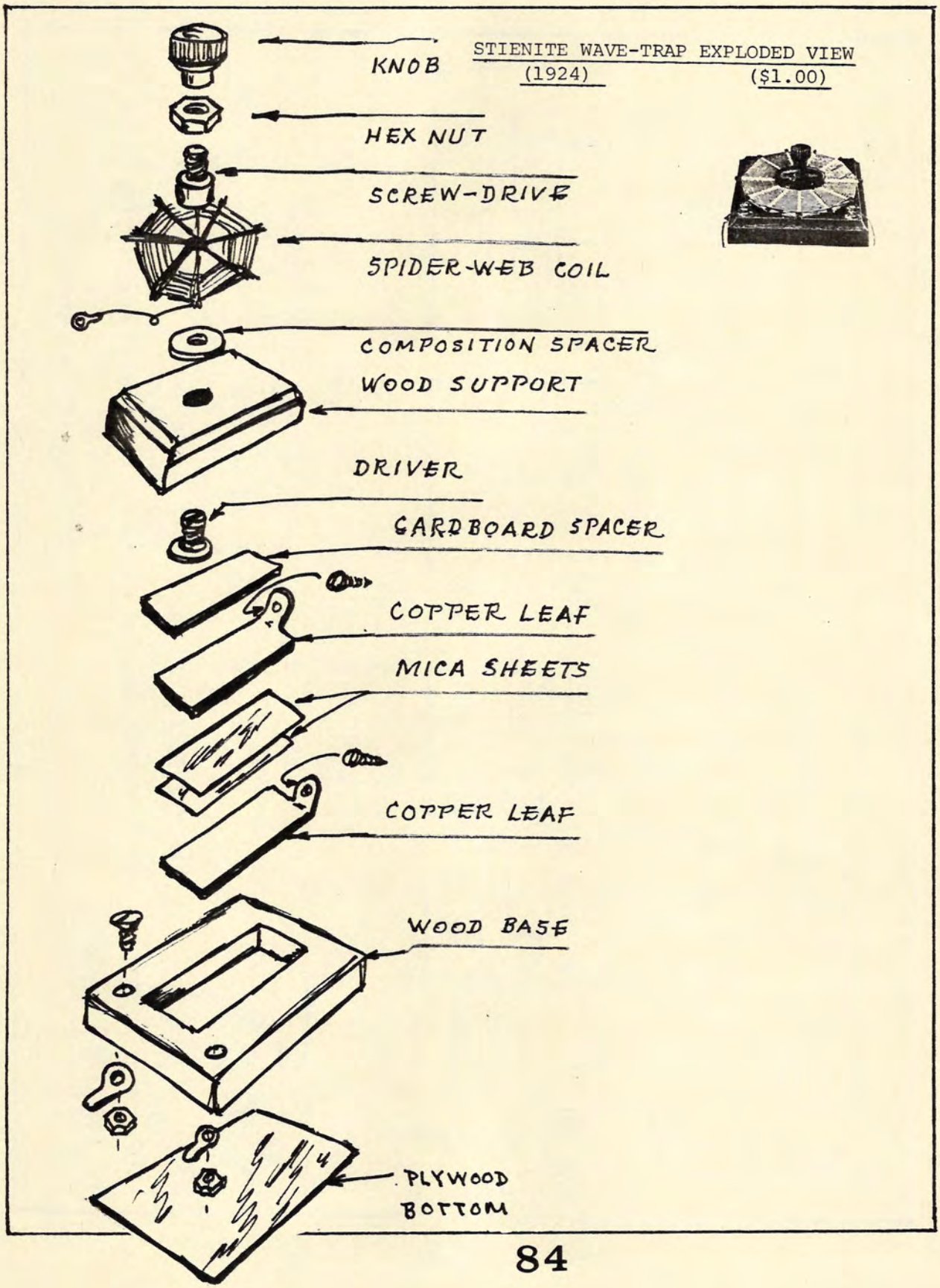

1924 - HERMAN BERNARD's "SUPERDYNE", PRECURSOR TO "DIAMOND OF THE AIR"

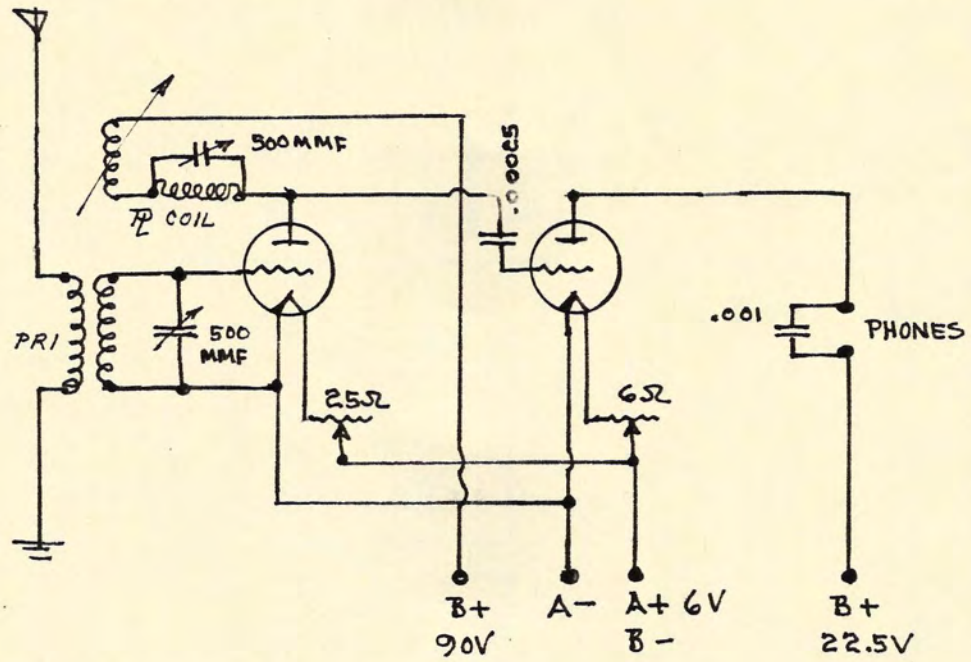

COIL DATA:

Plate Coil:	Coupler Coil:	Rotor:
Form = 4¼"Ø Wire = #22 DCC	Form = 4¼"Ø Wire = #22 DCC	#22 DCC Wire 18 Turns
46 Turns	SEC = 42 Turns PRI = 4 Turns Wound Over SEC.	

Variables = 23-Plates Each, 500 MMFD.

(CB #5-24)

COMBINATION CIRCUIT FOR SW & LW RECEIVER

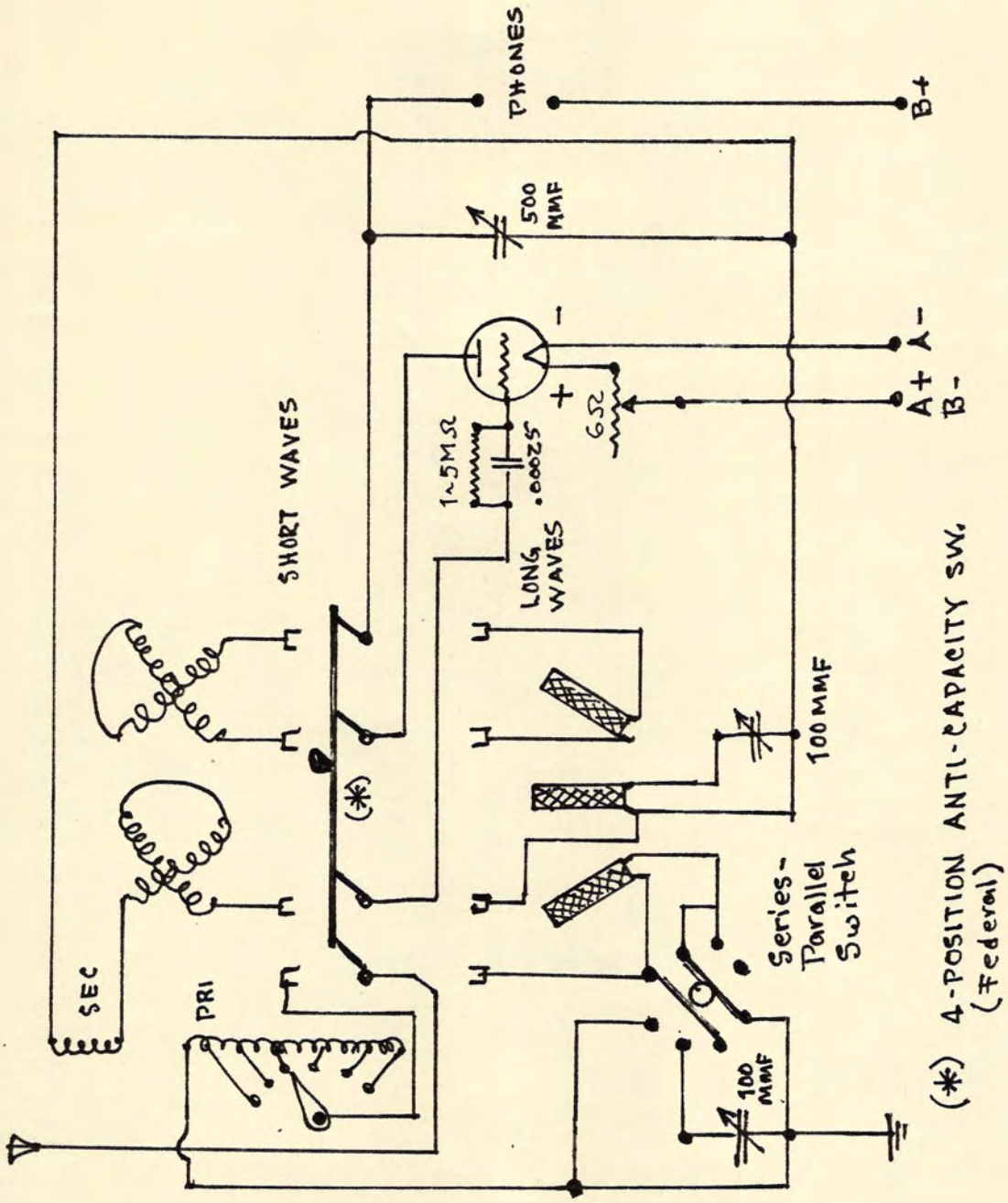

STANDARD 3-CIRCUIT REGENERATIVE

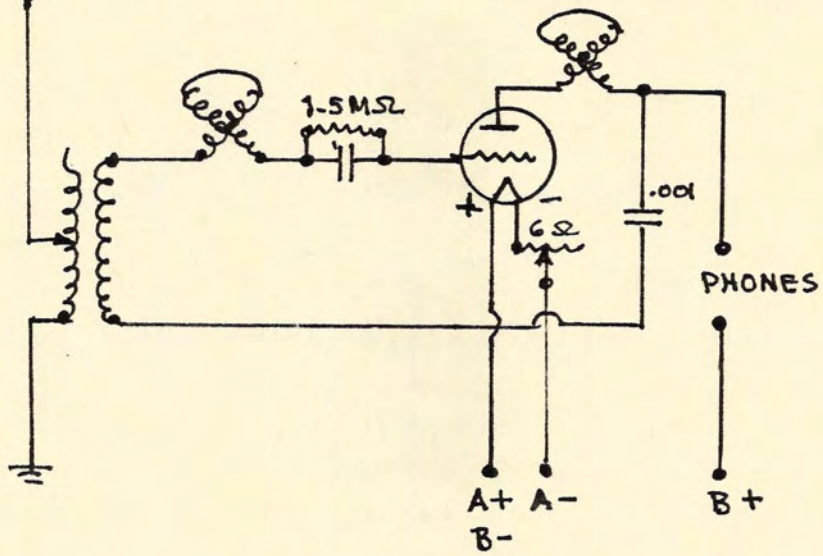

Receiver Range = 800 to 1,200 miles.
Both Variometers should be varied simultaneously.

THE "AUTOPLEX" CIRCUIT

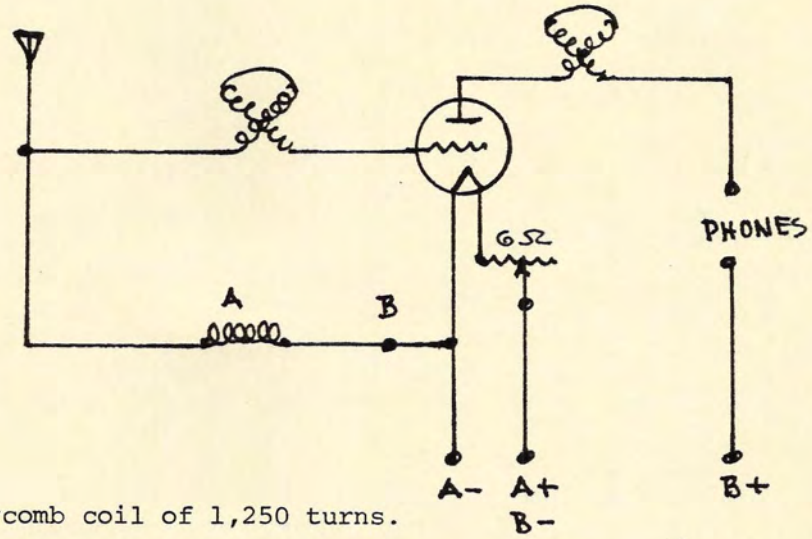

A = Honeycomb coil of 1,250 turns.

B = IF GND is used, connect at Point B.

ANT should be 50'.

BISHOP ULTRA-REGENERATIVE CIRCUIT

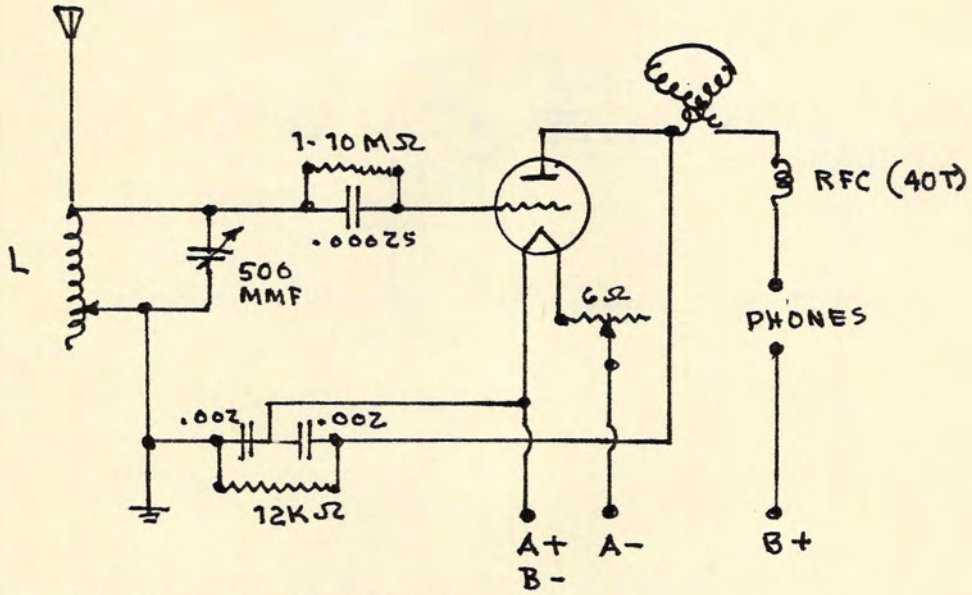

L= 80T, TAPT EVERY 10T.

COCADAY 4-CIRCUIT TUNER

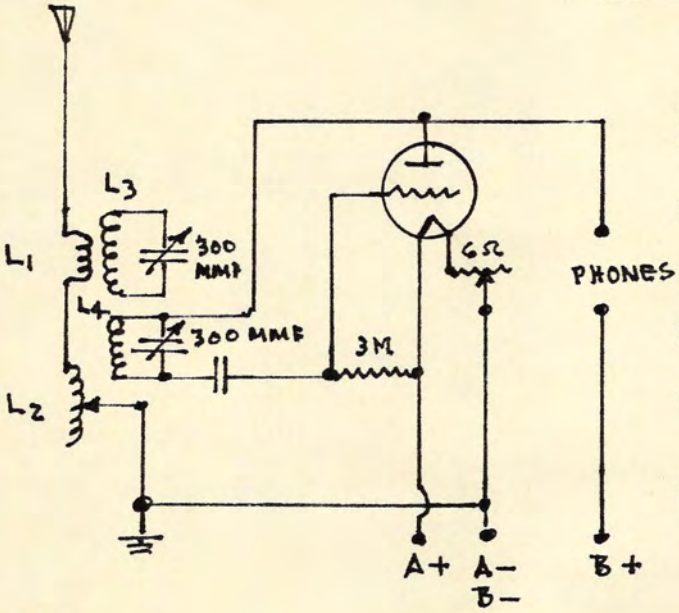

L1 is a single turn of buss-bar around L2.

L2 = 43T #18 SCC, 3"Ø Form; double bank-wound, tapt every 6 turns.

L3 = 34T #18 SCC, 3"Ø Form.

L4 = 65T #18 SCC on same tube as L3, 1/8" seperation.

17-Plate Variable.

(AH)

GERNSBACK's "INTERFLEX" REGENERATIVE SET
Sht. 1

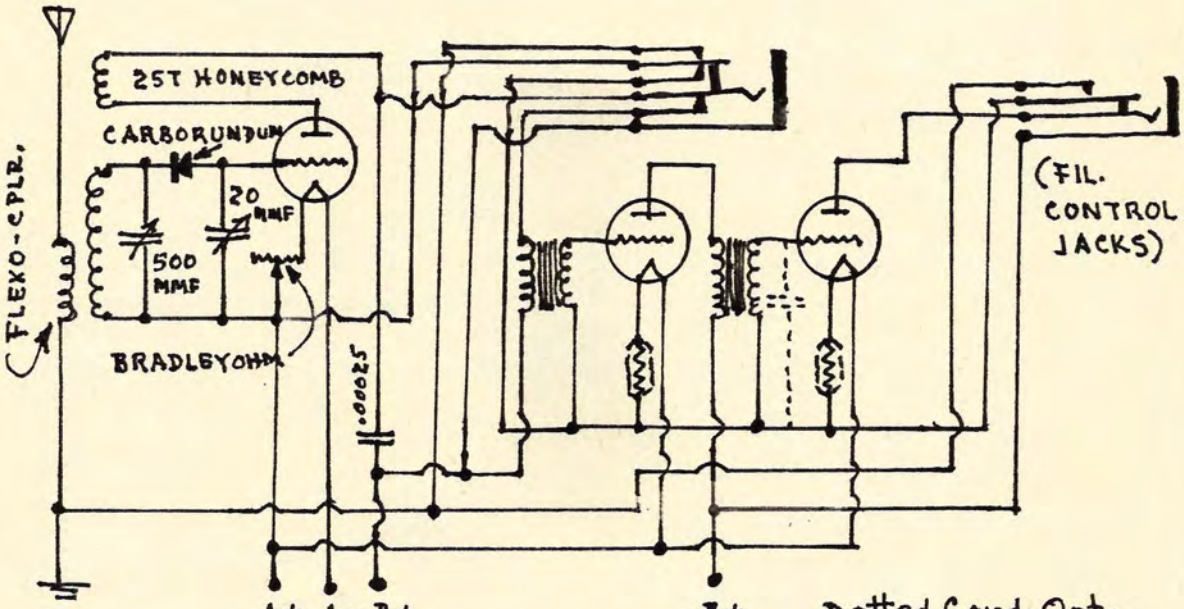

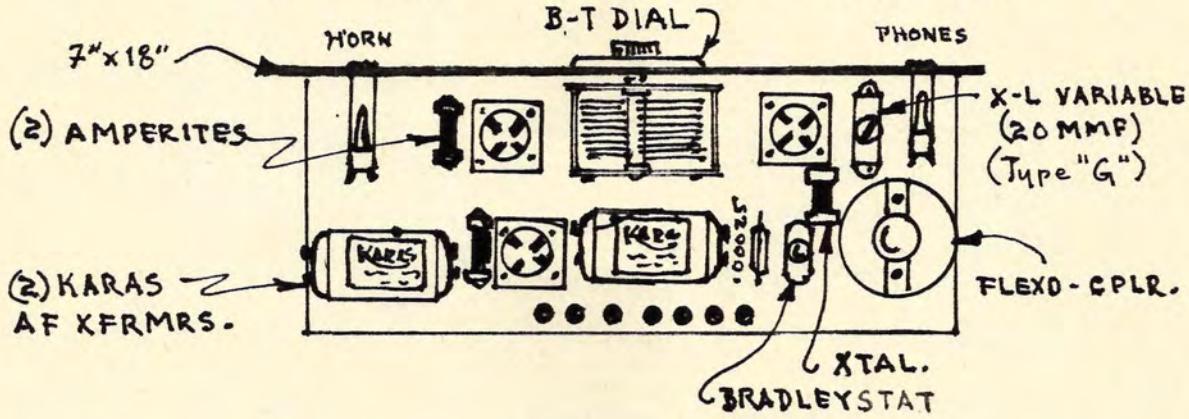

(AH#2-26)

GERNSBACK's "INTERFLEX" REGENERATIVE SET
Sht. 2

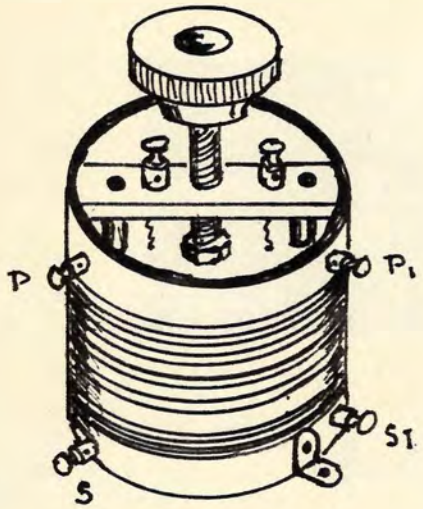

"FLEXO-CPLR."

NOTES

1. BRADLEY STAT MANDATORY.
2. XTAL. MOUNTED DIRECTLY ON GRID BINDING POST.
3. KEEP ALL WIRES @ LEAST 2" FROM XTAL.
4. DO NOT USE A GALENTA XTAL.
5. REVERSE XTAL. LEADS FOR BEST SIGNAL.

CAUTION

(D) GUIDE RODS MUST NOT BE METAL!

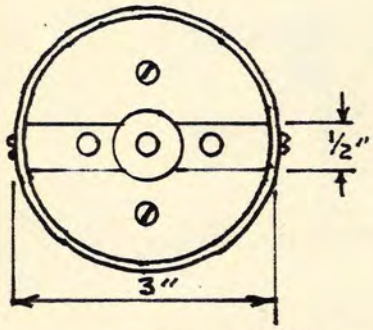

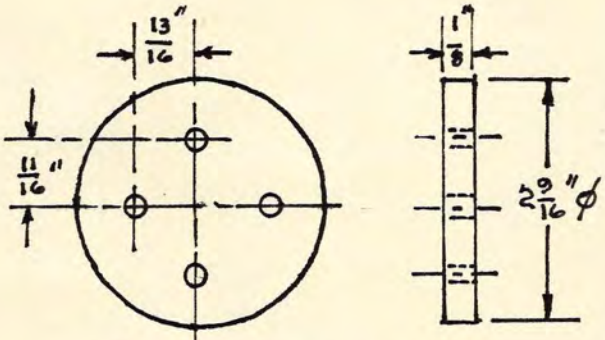

(A) 2 REQ. - HARD RUBBER

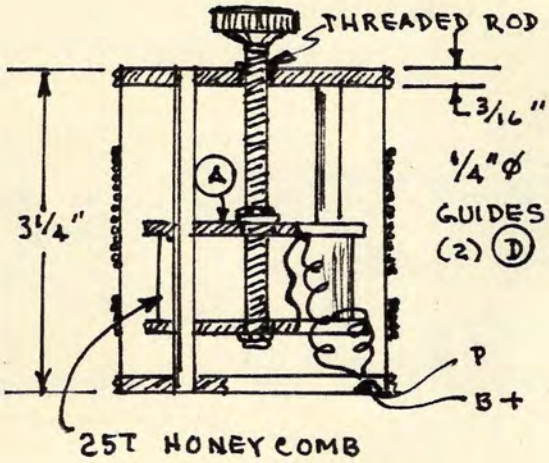

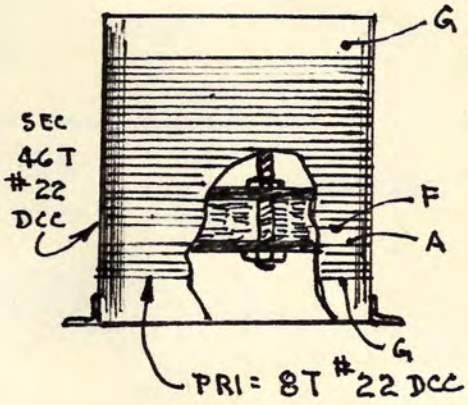

SET WILL OPERATE W/ TICKLER LEADS CONNECTED IN ONLY ONE WAY.

TYPICAL 'MULTI-VALVE" CONNEXIONS,1924

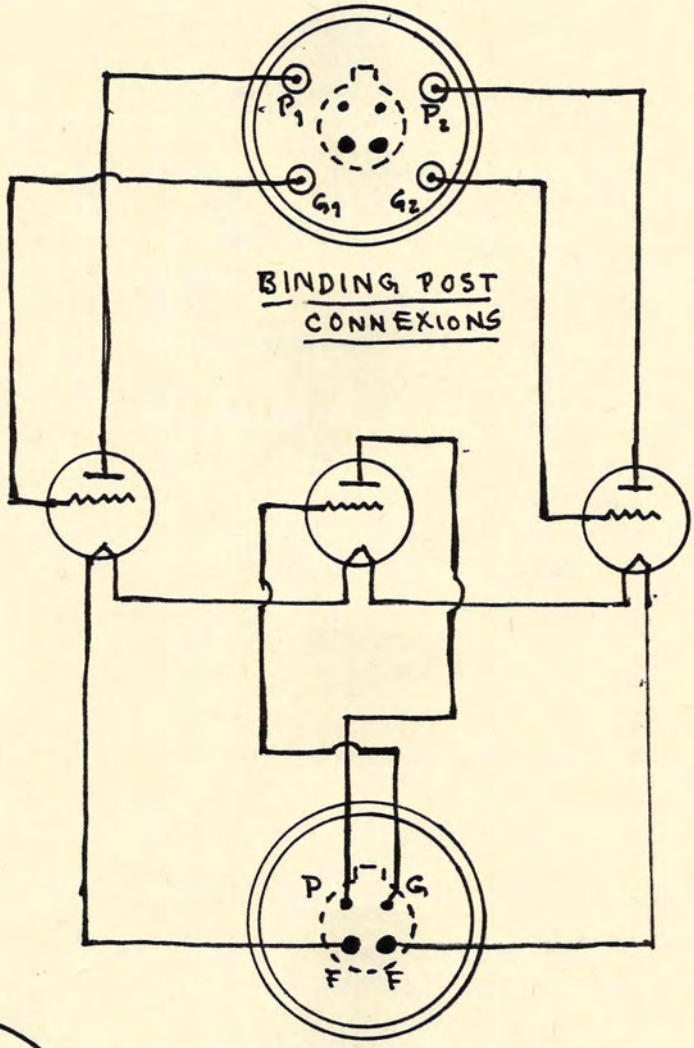

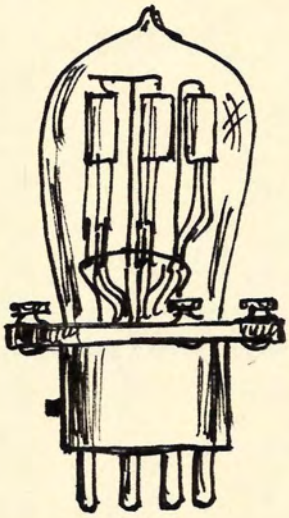

BOTTOM PIN CONNECTIONS

MANUFACTURERS:

Haynes
Lodge
Fleming
Emerson

CRYSTAL TESTING CIRCUIT, 1926

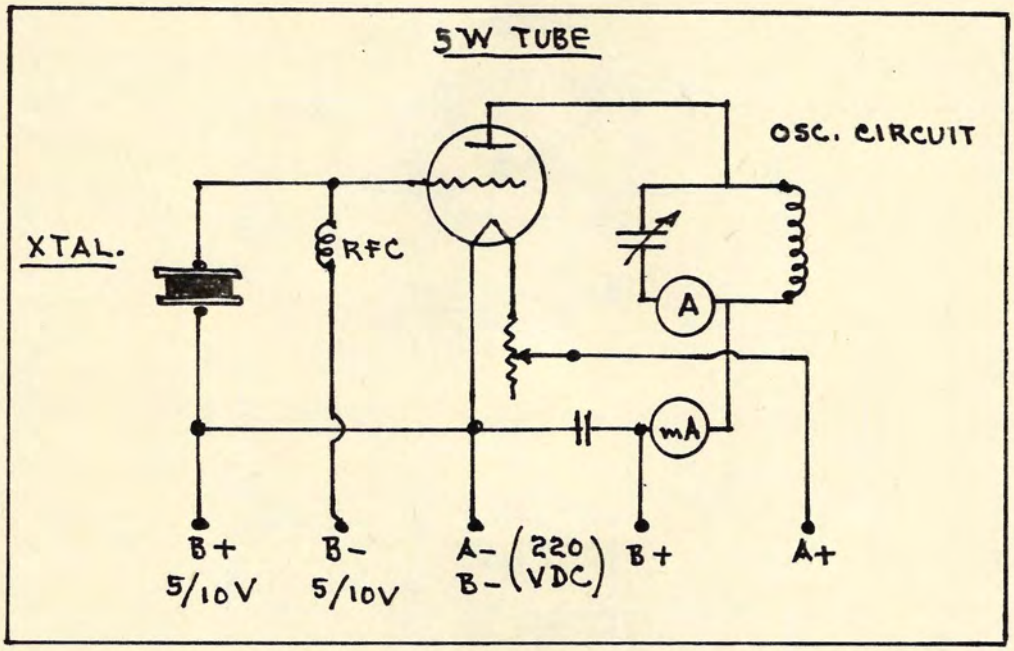

TO TEST VINTAGE CRYSTALS:

1. Wash crystal in soap and water; dry thoroughly.

2. Insert xtal. into circuit; rotate variable.

3. If your set is a low-loss type, ammeter should read between 1 and 2.4 amps.

4. If xtal. does not ocillate, check for the following:

   a. Poor quality of quartz used.

   b. Axes not correctly determined.

   c. Crystal not clean. (Finger-prints will frequently prevent oscillation.)

   d. Slight nicks on edges of xtal; xtal. contains scratches or flaws.

   e. Plane surfaces of xtal. not parallel to required accuracy.

CRYSTAL DETECTOR WITH RF AMP.
(1924)

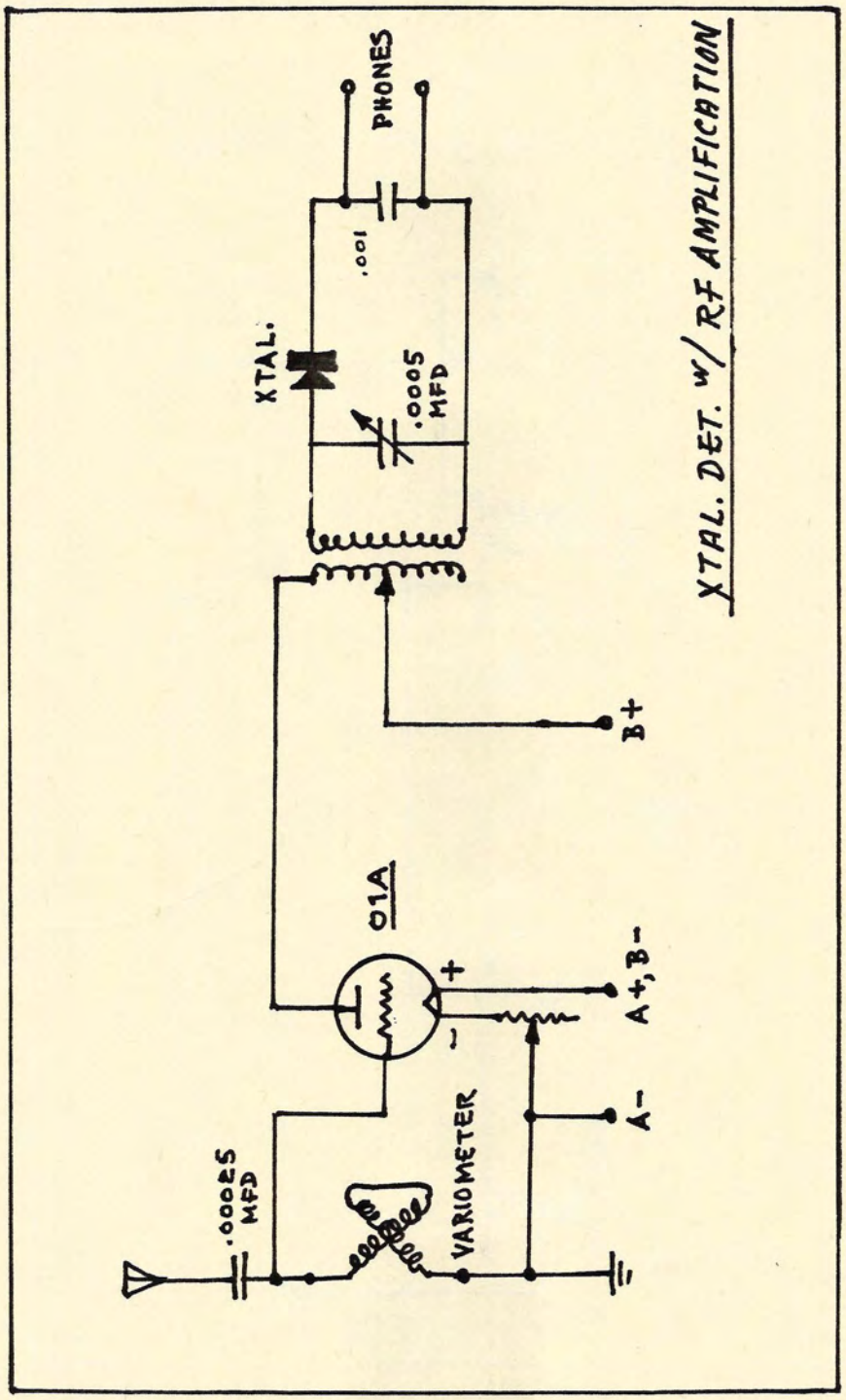

CRYSTAL DETECTOR WITH AF AMPLIFICATION
(1924)

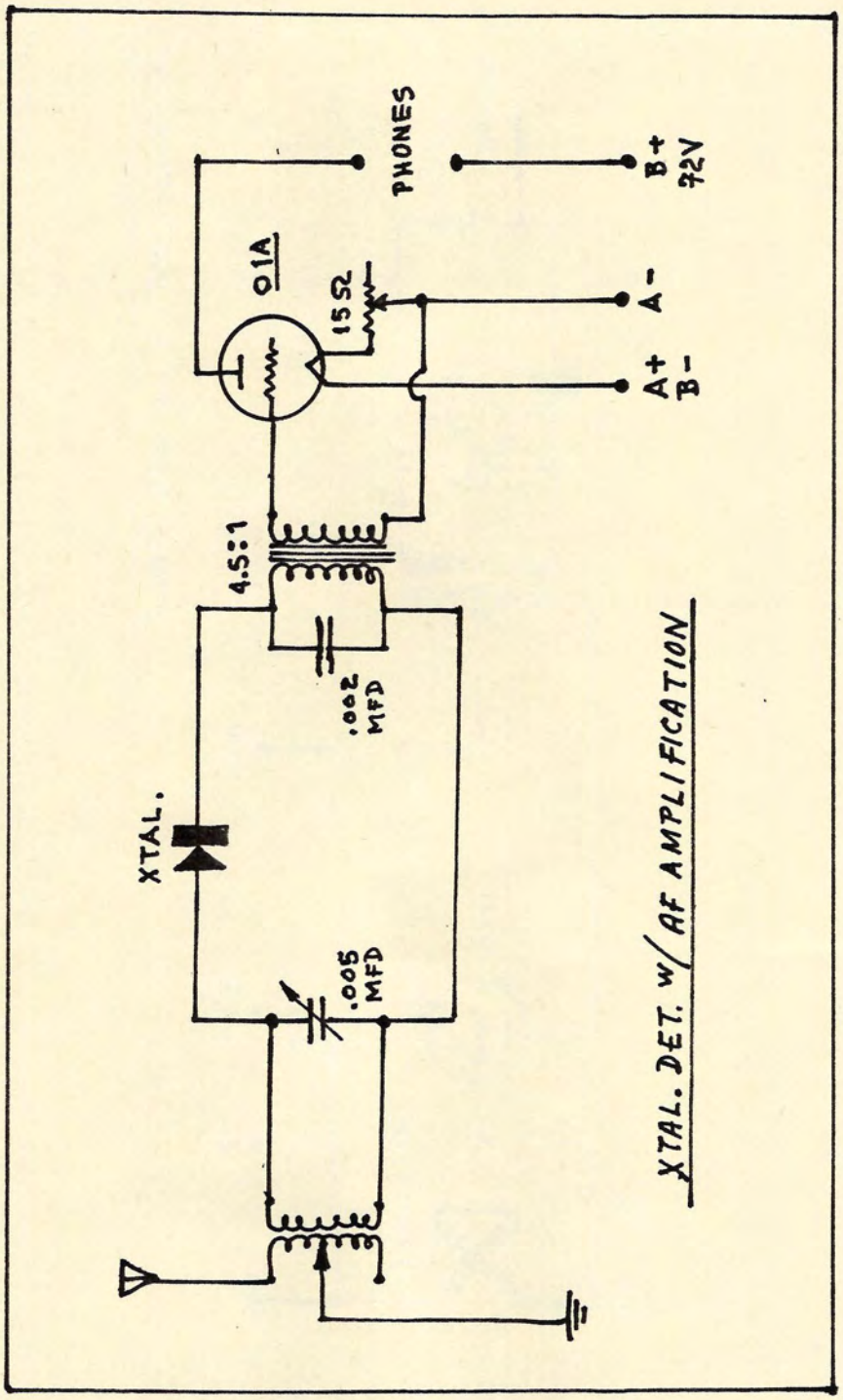

SHORT-WAVE/LONG-WAVE SWITCHING CRYSTAL DETECTOR CIRCUIT - 1923

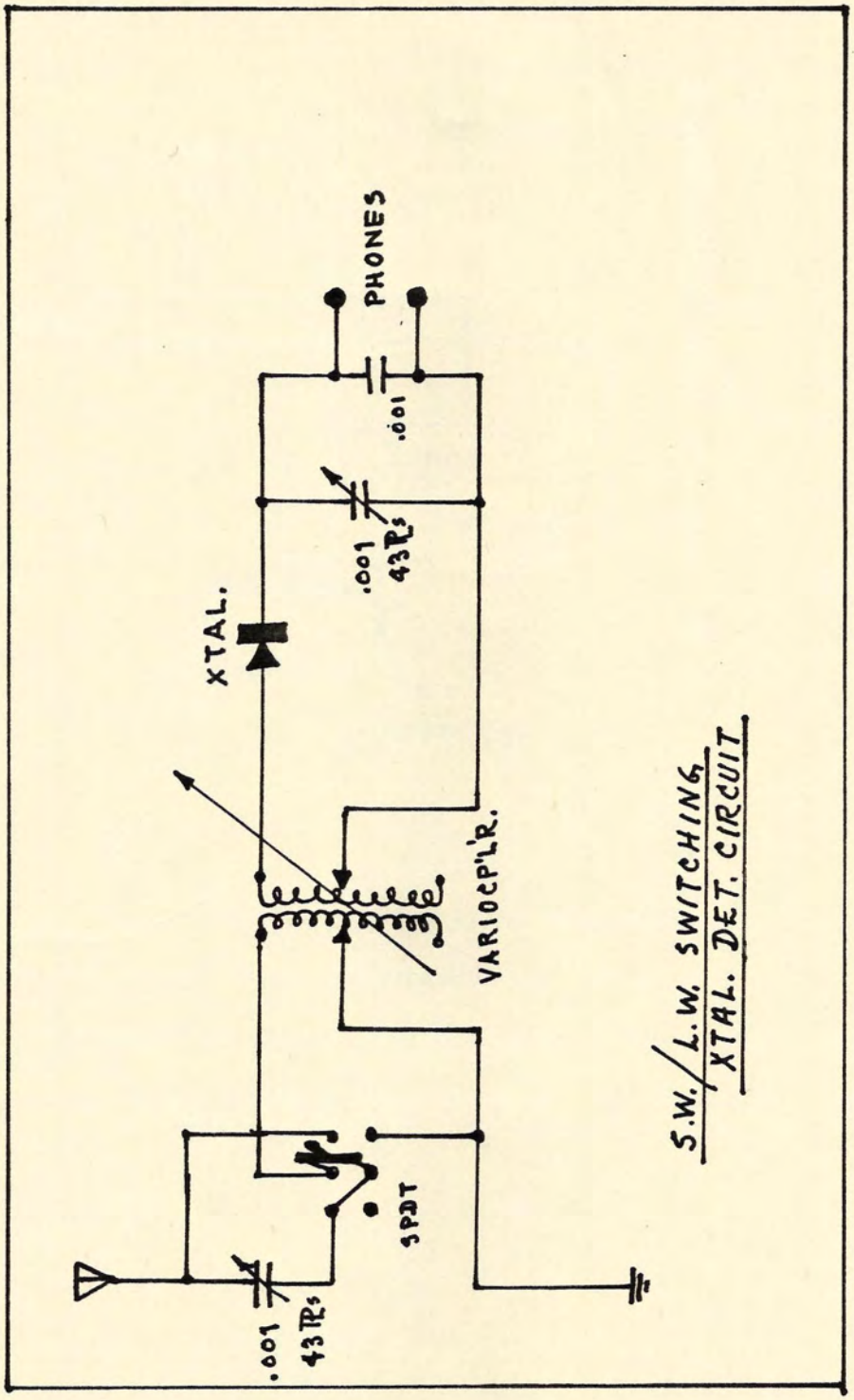

A FLEMING VALVE RECEIVER, 1924

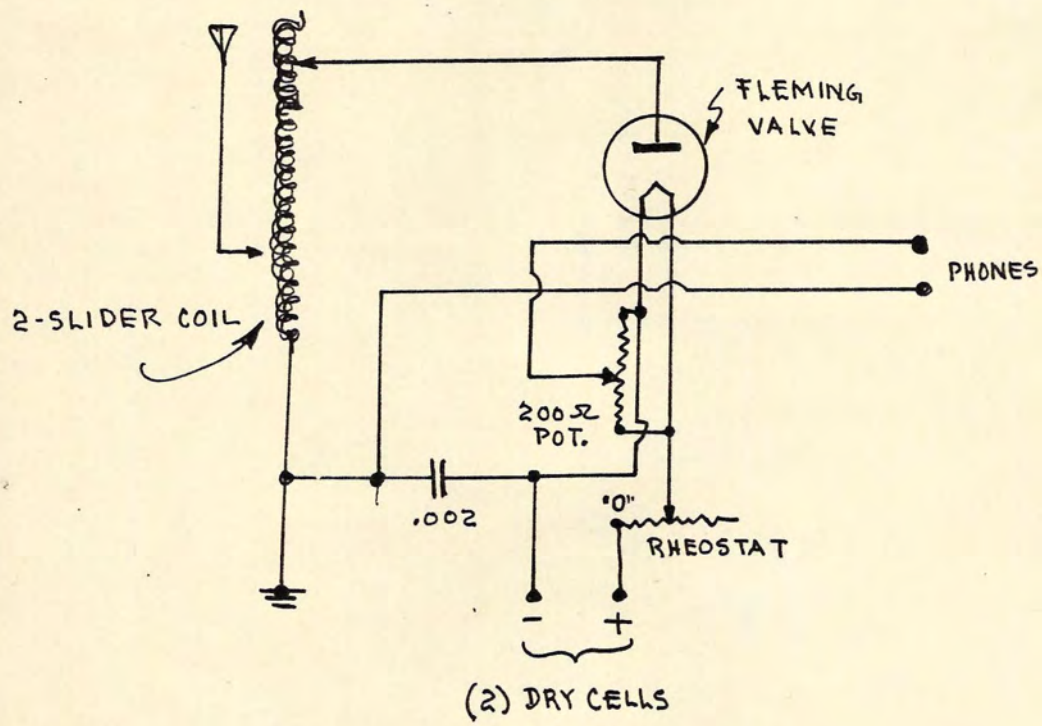

NOTES:

1. Turn rheostat until signal is loudest.
2. It will not be necessary to adjust rheostat further.
3. Tube will retain its sensitivity for several hours.

CAUTION: DO NOT ATTEMPT TO OPERATE ANY FLEMING VALVE WITHOUT A RHEOSTAT SET INITIALLY AT ZERO!

(RD 1926)

FOX 2-STAGE AMPLIFIER, 1923

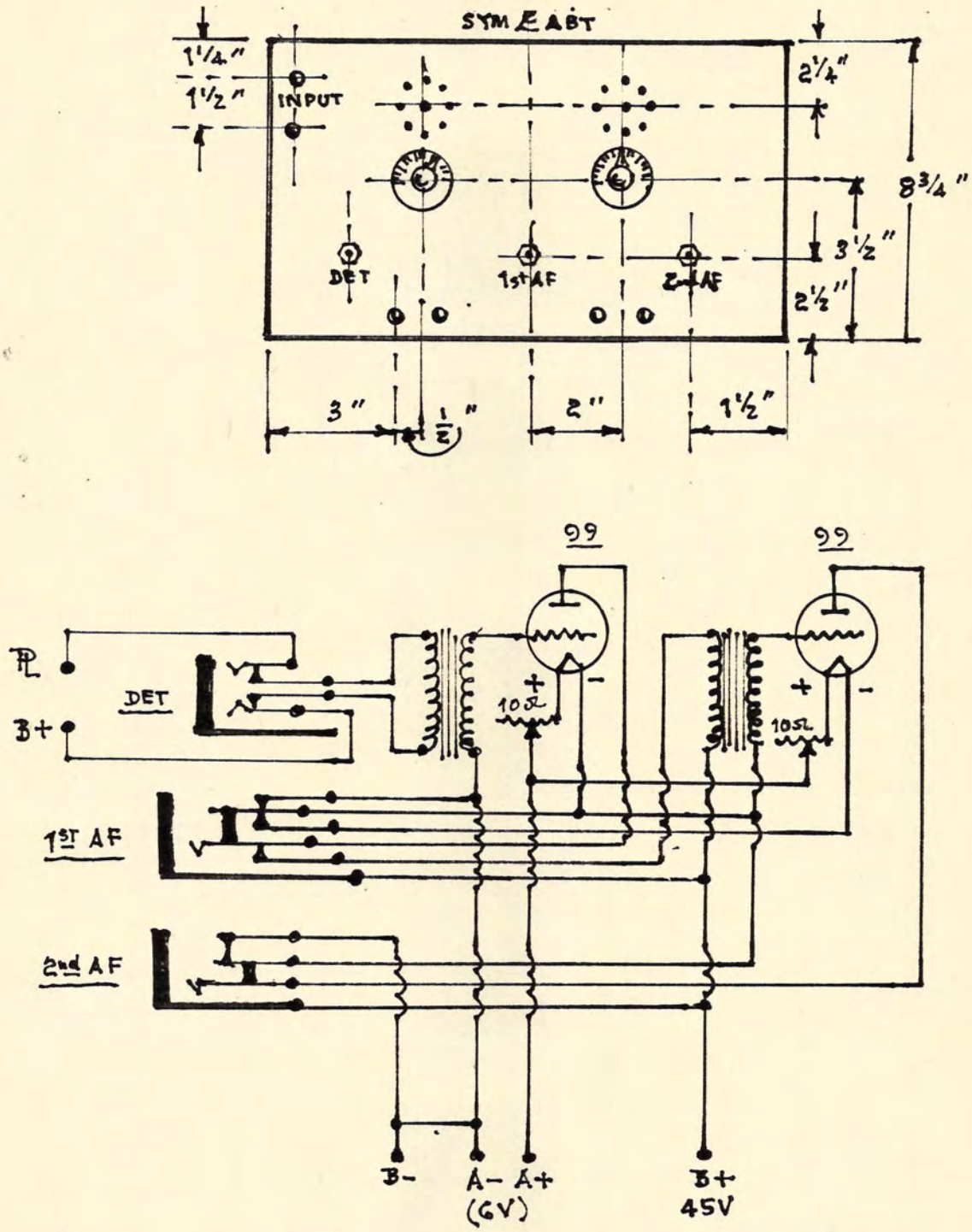

NORTHERN ELECTRIC (CANADA) "Peanut Receiver", Model R-11; 1923
(See Also RADIOLA III.)

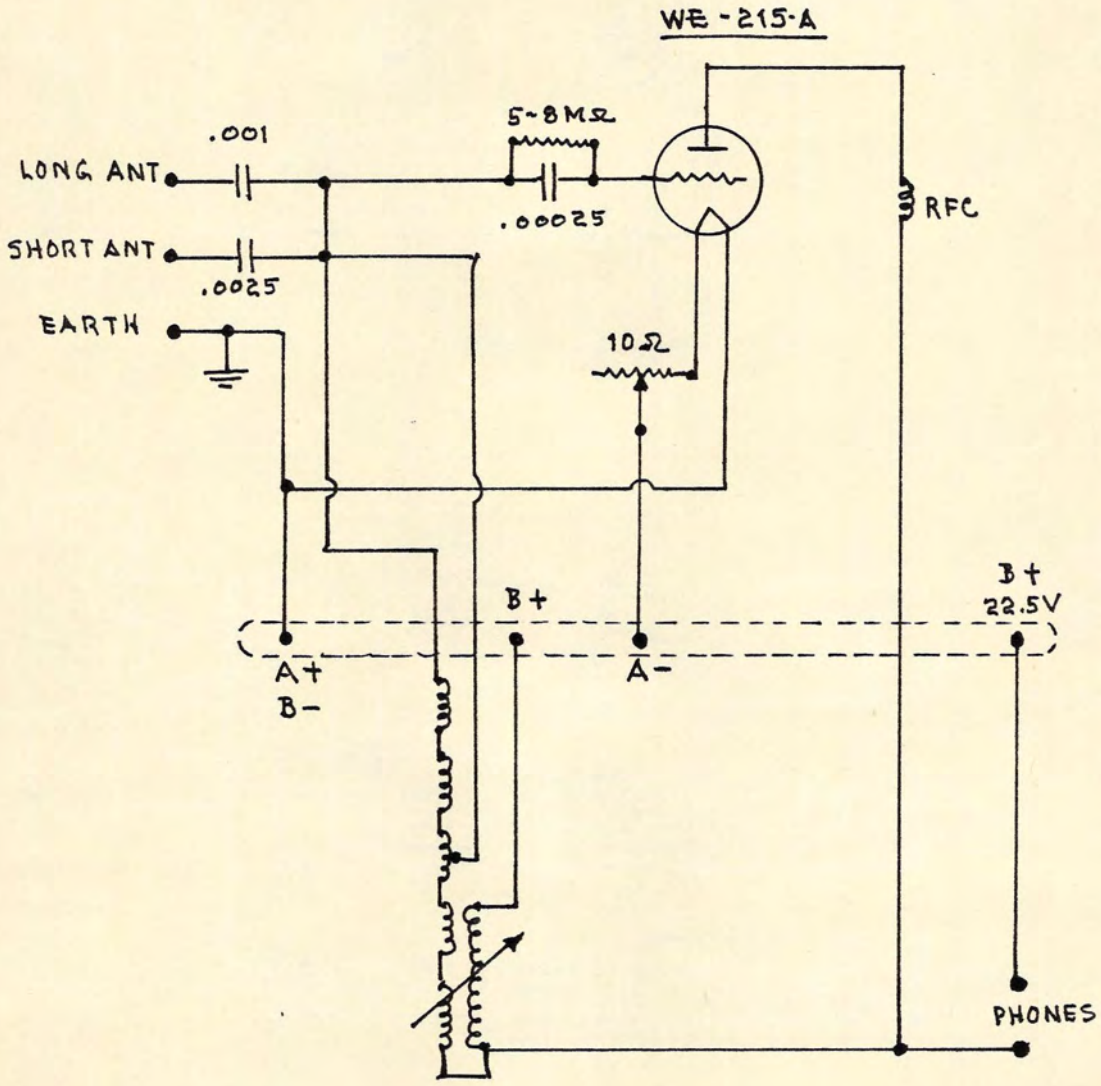

(RD-1923)

TRIPLE HONEYCOMB COIL REGENERATIVE RECEIVER, 1924

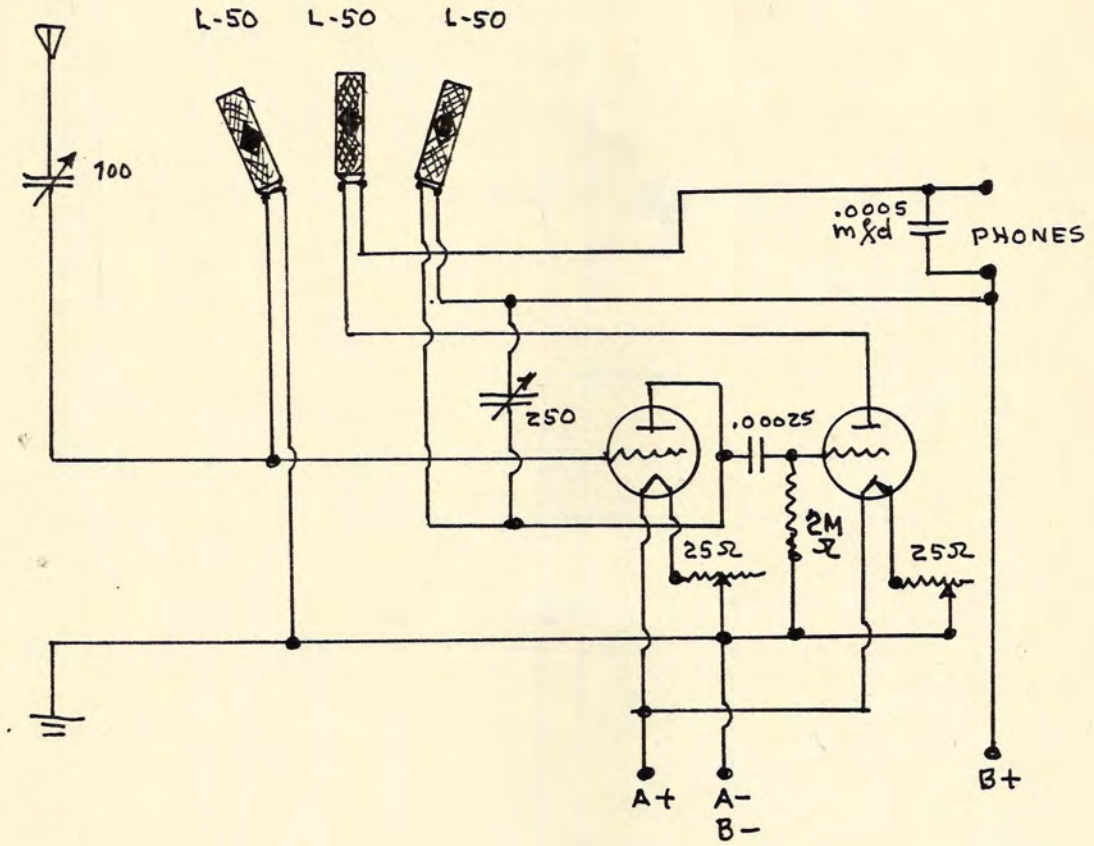

NOTES:

1. Triple coil mounting, such as Remler, Cota, etc.
2. Mounted honeycomb coils = 50 turns each.
3. Either 99 or 01A tubes may be used.
4. B+ should be between 45V and 67.5VDC ONLY.
5. Both tubes are regenerative in this hook-up.
6. If only the lower frequencies are picked up, try a 75-turn coil
7. In early schematics, honeycomb coils were always designated by the letter "L". followed by a number representing turns.
8. Tuning is delicate, but sharp.
9. Original cost, less tubes and batteries was $31.55 - when the dollar was on the Gold Standard.

(RD · 1926)

FLEWELLING CIRCUIT No. 2; 1925

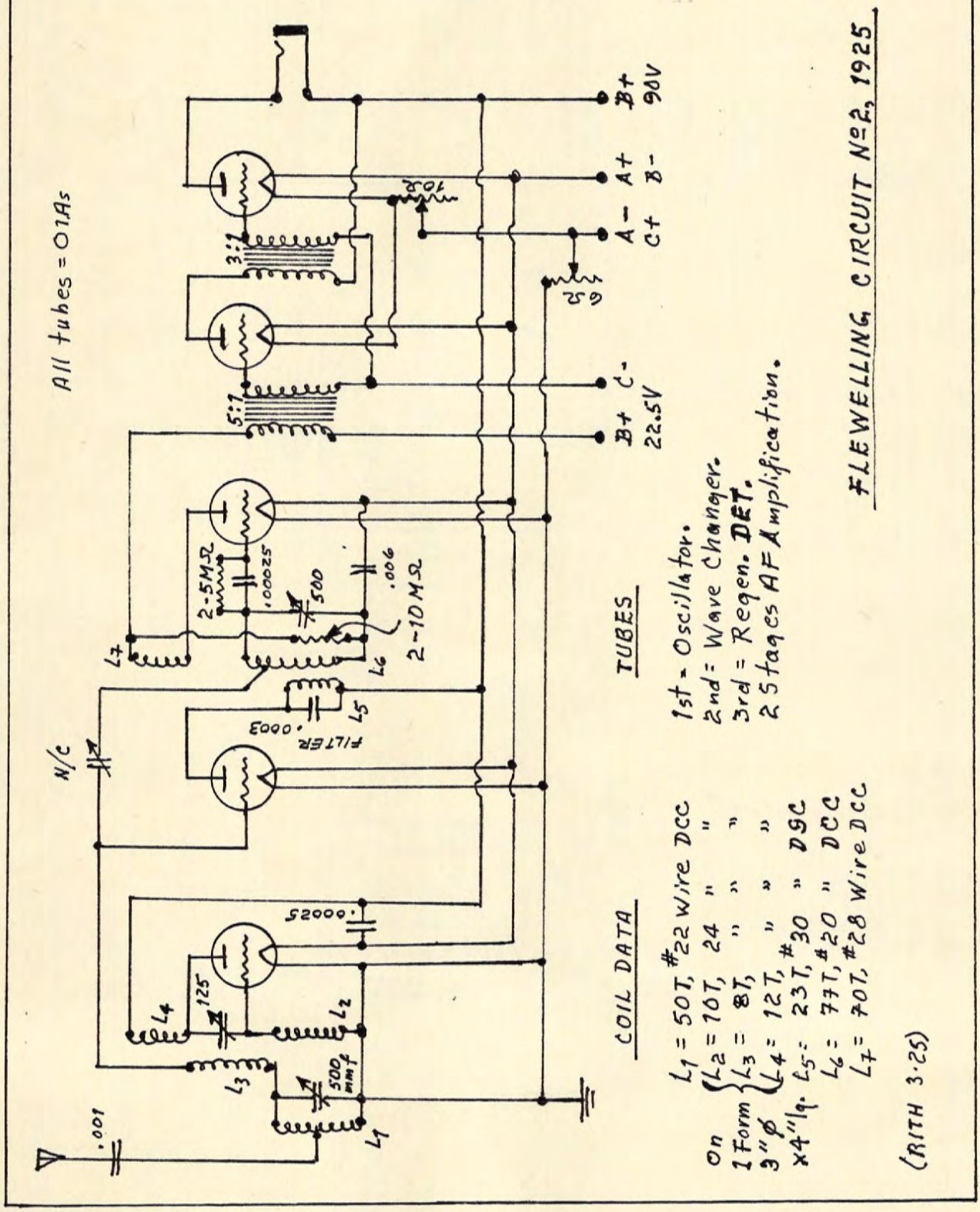

RAULAND "ALL-AMERICAN" HOOK-UP, 1922

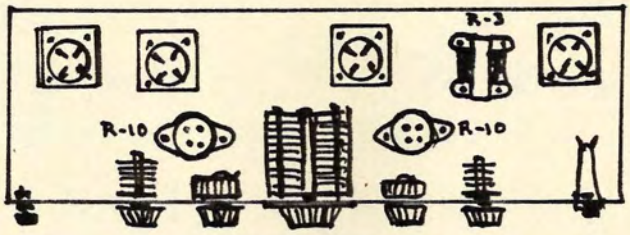

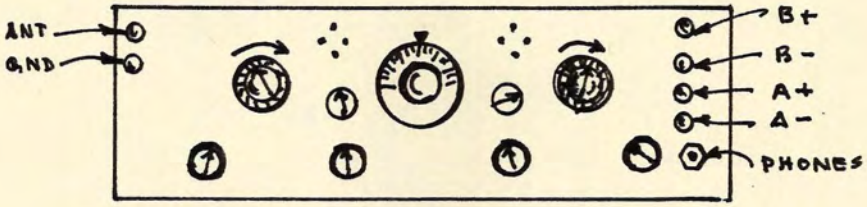

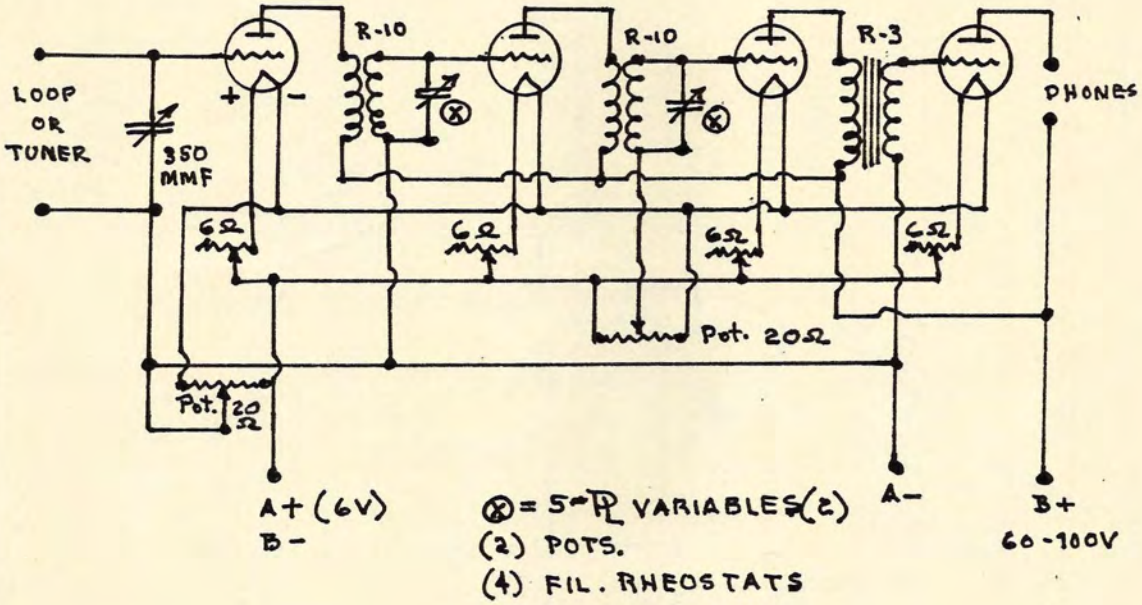

KENNEDY MODEL 220 SW RECEIVER

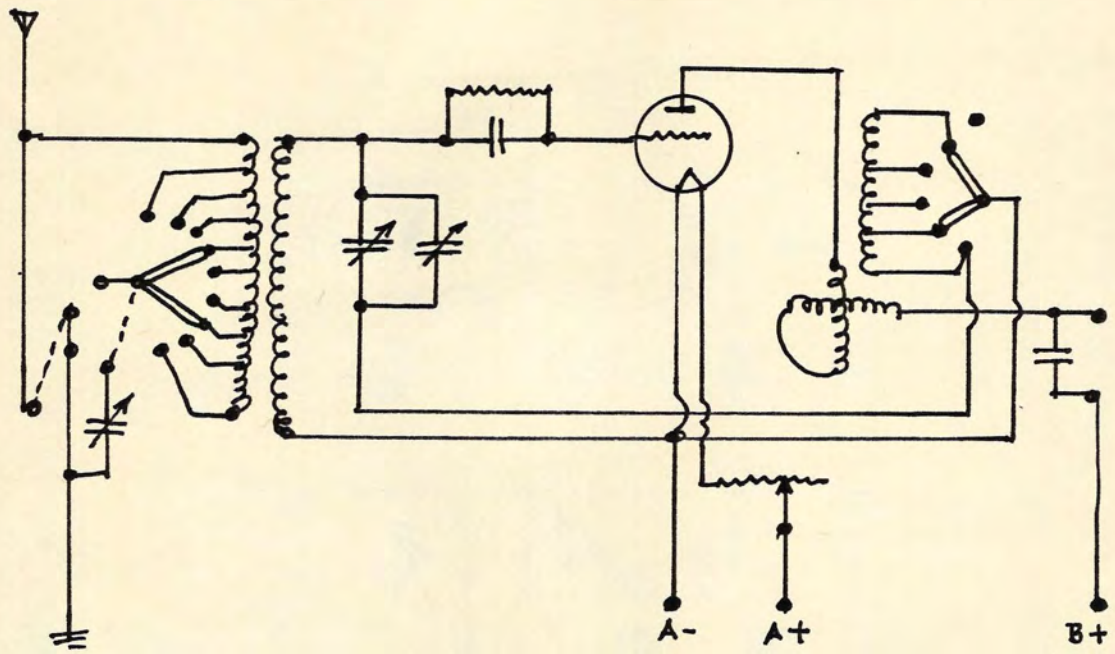

KENNEDY MODEL 281 SW RECEIVER

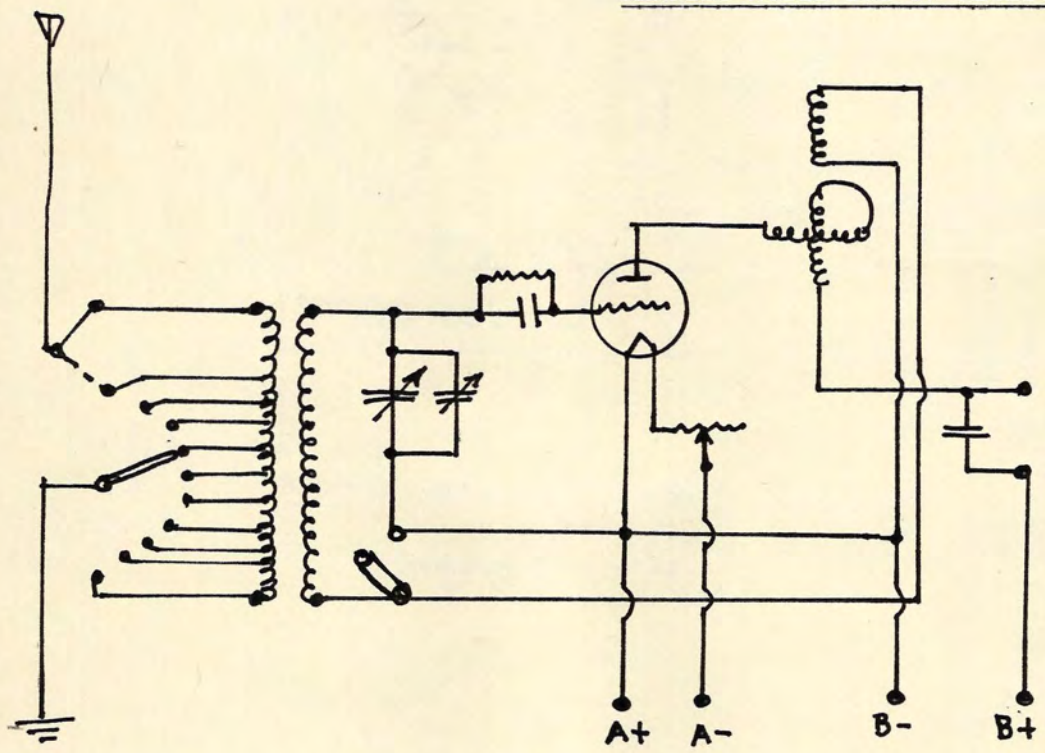

A NOTE ON THE REINARTZ CIRCUIT

At this late date it is difficult to decide whether Reinartz's reputation (which was deserved) turned on an innovative circuit, or on his design of an extremely efficient spider-web coil.

And like all so-called break-throughs of the period, the media-management of the attributed virtues of the Reinartz Coil created another media controversy. And much was made of Reinartz receivers and transmitters along with the man himself, going along with MacMillan's Artic sojourns. But while most media were touting the virtues of Reinartz's contribution, and incidentally giving much free publicity to the then-emerging Zenith Radio Company, there was one magazine that took exception.

The exception was RADIO, the San Francisco magazine that began life as PACIFIC RADIO. The editors took exception to the lack of qualified praise of Reinartz's coil and circuits by commenting as follows:

1. The circuit did not comply with the Commerce Department's regulations (under Hoover) which stated that direct-coupled circuits emitted broad waves, harmonics, and parasitic wavelengths;

2. It was a standard Hartley oscillator modified by the addition of 3 unnecessary condensers;

3. Its harmonic oscillations were impressed directly across the ANT, thus were easily radiated;

4. Tests showed that an 8K or 10K cycle side-band was transmitted on each side of the carrier frequency, so that keyeing was heard by listeners whose sets were tuned to another frequency;

5. QST published the Reinartz circuit with an editorial warning against its use by amatuers, or anyone else.

It would seem that the age of the American Anti-Hero began much earlier than the Strident Sixties. During the mid-Twenties, numerous articles appeared for "improving" the Reinartz circuit, "modifying" the Reinartz, the "Ultra" Reinartz circuit, and on and on. But it did endure in popularity for quite awhile, although not quite as long as the Abélé circuit of similar concept in Europe.

In the following pages you will find a handful of Reinartz circuit modifications, along with a full-scale template of the famous Reinartz coil. You will also find a sketch of Reinartz's personal transmitter at his home in Connecticut after his return from the MacMillan expeditions.

* * *

THE REINARTS CIRCUIT of 1923

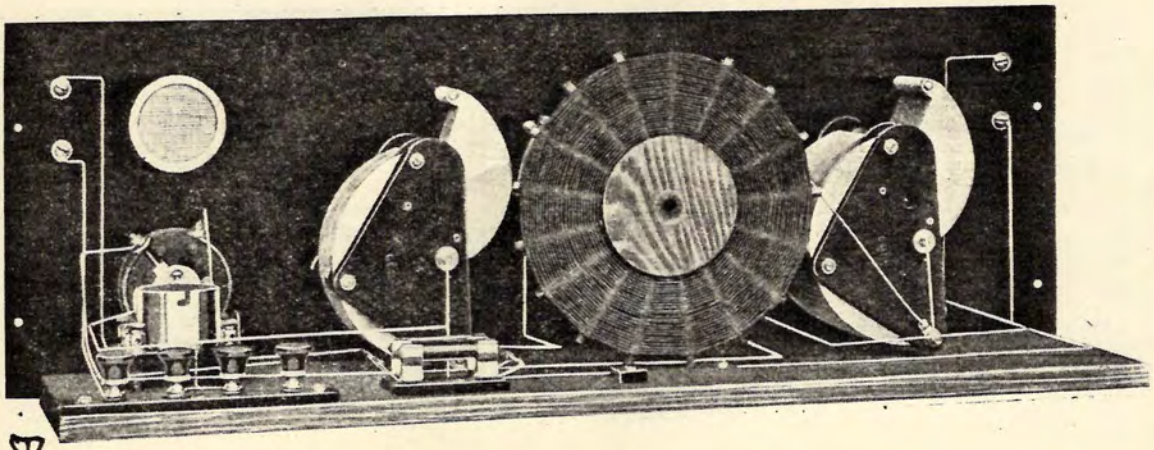

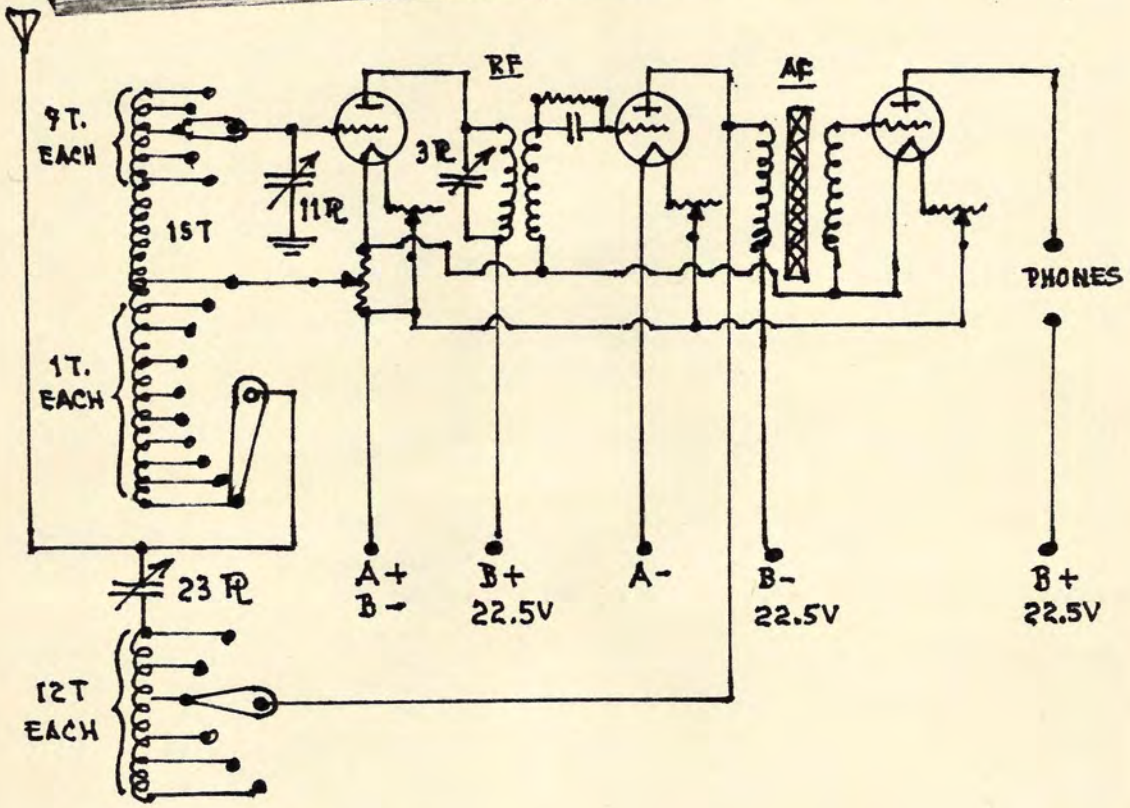

150 to 575 Meters.
1 Stage of RF Detector 1 Stage AF
#26 Wire used on Coil (See Coil Data Sheet).

NOTE: THIS RECEIVER RADIATES!

(CB 11-23)

REINARTZ-ZENITH SW RECEIVER & TRANSMITTER, 1925;Sht.I

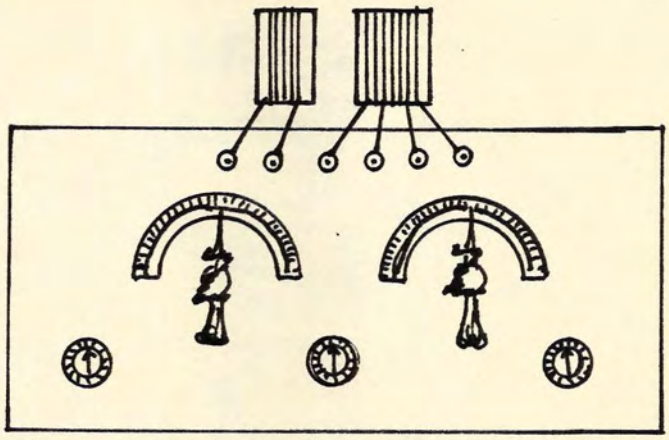

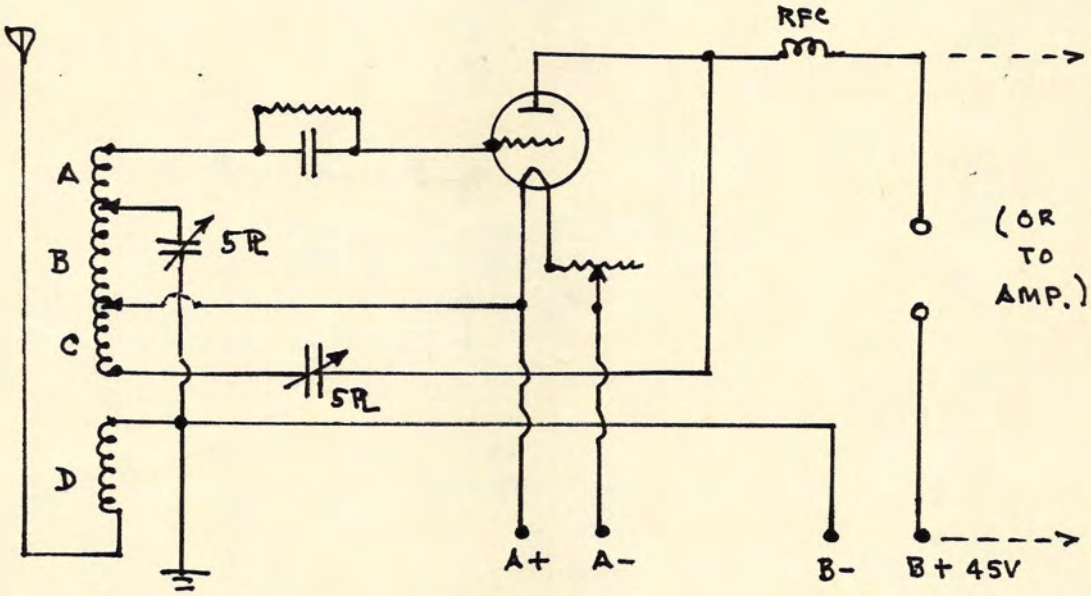

RFC = 1"ø x 3" ~ #30 DCC, SOLENOID-TYPE.
A-B-C = Single Coil Tapt @ 3 Places; 3½"ø Form.
20 Meters = 3T #16 DCC
40 " = 6T "
80 " = 12T "
} Seperate Coils
D = 5T #16 DCC, 3½"ø, For 20 & 40 Meters.
10T " , " , " 80 Meters.

REINARTZ-ZENITH SW RECEIVER & TRANSMITTER, 1925; Sht.2

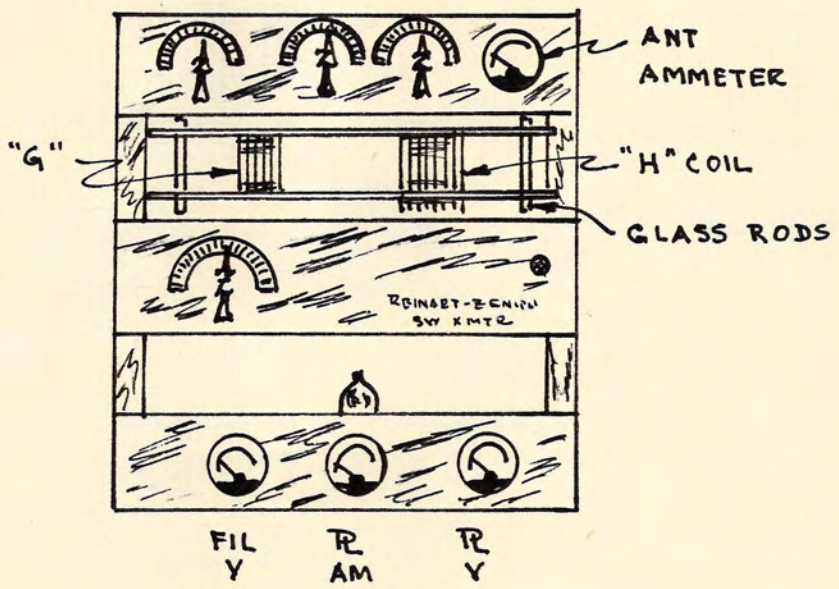

NOTES:

1. ALL VARIABLES (4) = 250 MMF.
2. RFC = 1"Ø X 4", # 24 DCC
3. G-H = EDGEWISE WOUND HELICES 6"Ø, SUPPORTED ON GLASS RODS.

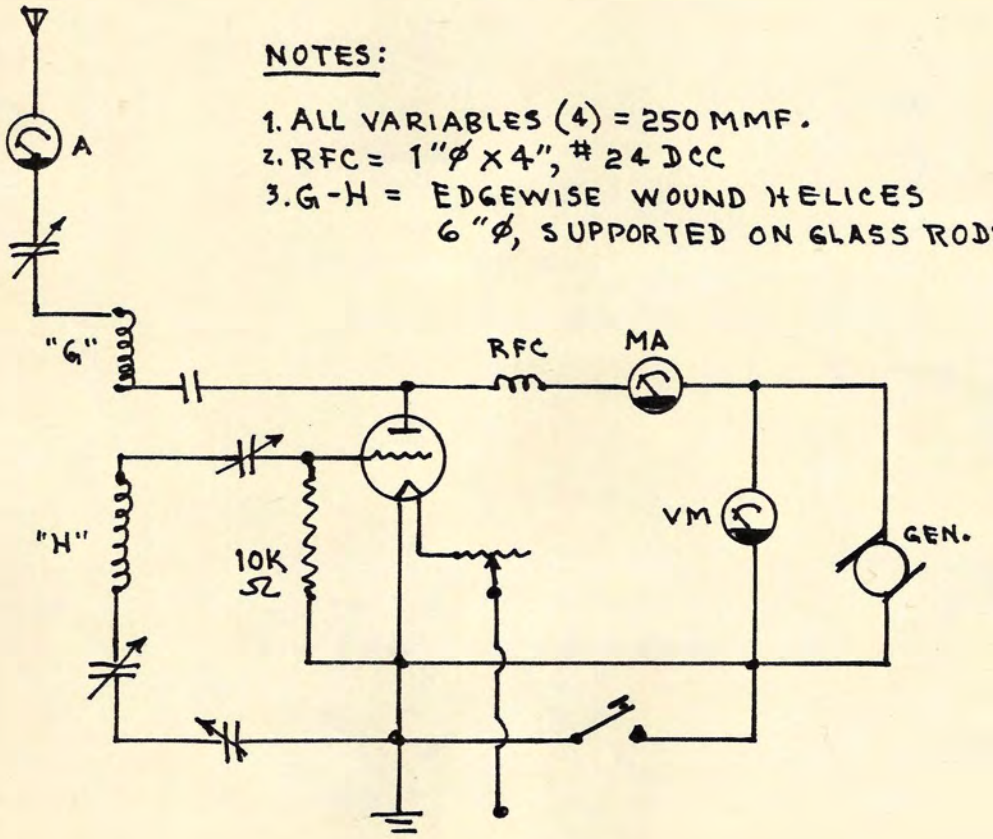

THE ORIGINAL & FAMOUS REINARTZ COIL, 1922

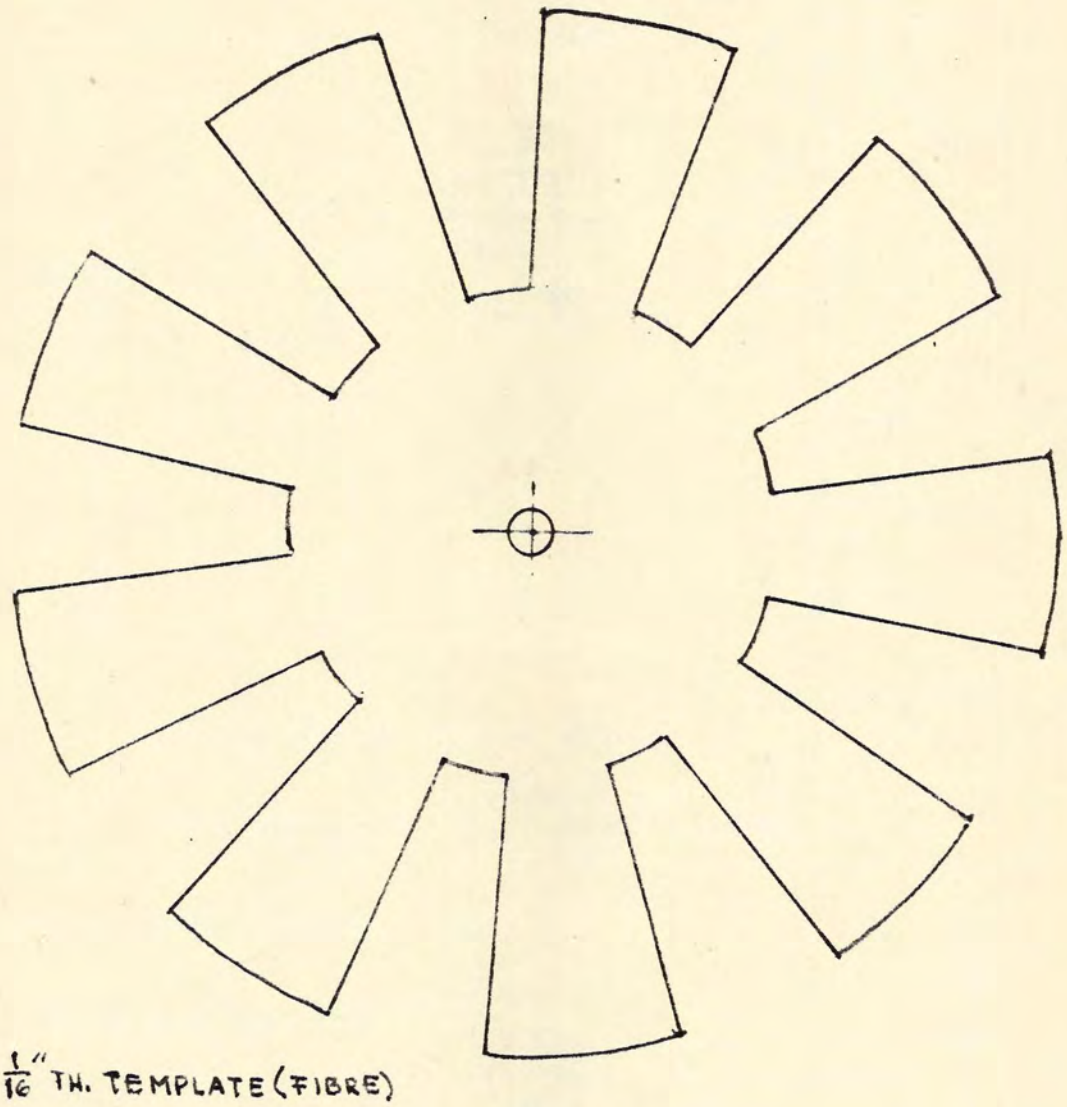

FULL SCALE

The Reinartz coil was a spider-weave around a 2.5" centre, and an O.D. of 5.5". Wound with #22 DCC on 9 spokes. Starting from the centre, wind 15 turns and tap; wind 15 turns and tap; wind 15 turns and tap. Cut wire and begin the other winding: 40 turns tapt at 2nd turn , 4th turn, etc., every 2 turns to 8 turns. Then tap 9 and 10 turns; wind 15 more turns and tap; 5 turns plus 10 turns, tapt at 40 turns. You will wind-up with 11 outside taps and 4 inside taps. If AF is erratic, when using the Reinartz coil, insert a 75-turn honeycomb coil in the Plate circuit of the Detector.

THE BASIC REINARTZ CIRCUIT

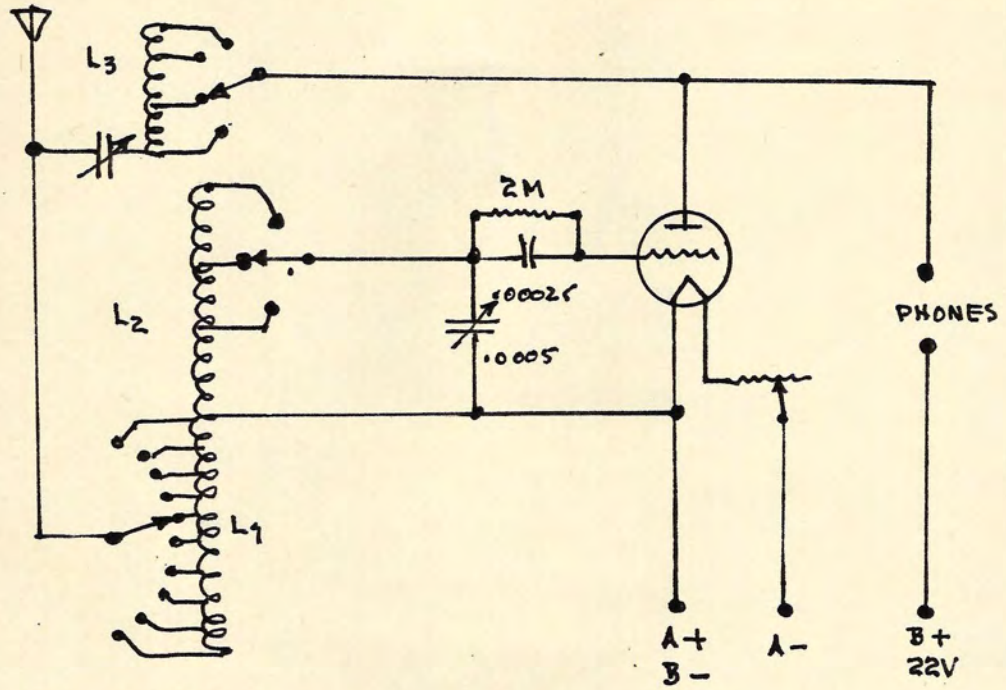

COIL DATA:

L_1 = 11T } Tapt @ 2,4,5,6,7,8,9,10,11 T.
L_2 = 40T }
L_3 = 45T, Tapt @ 15 & 30T.
COIL 1st Turn Dia. = 1½"Ø, #26/#28 DCC.

MODIFIED REINARTZ, 200 - 600 Meters

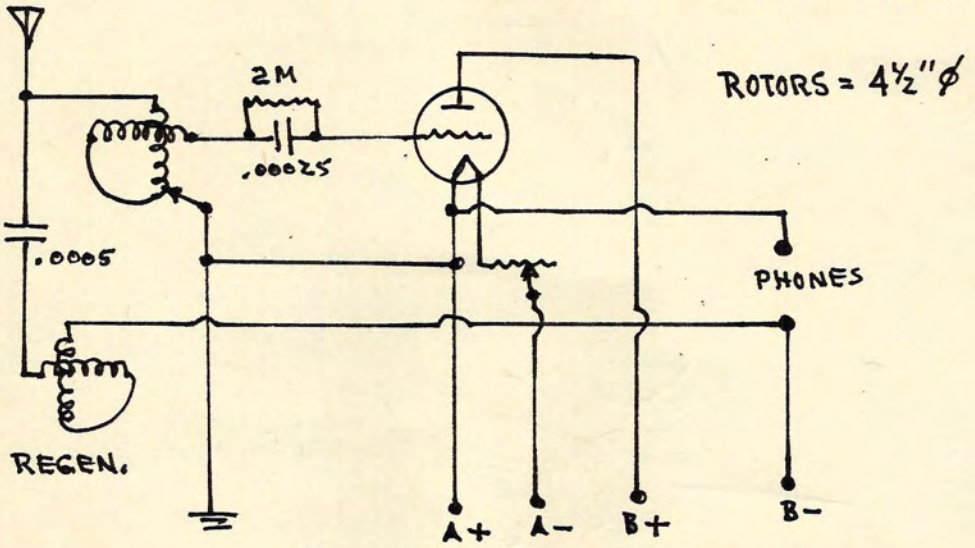

THE "ULTRA REINHARTZ" CIRCUIT, 1924

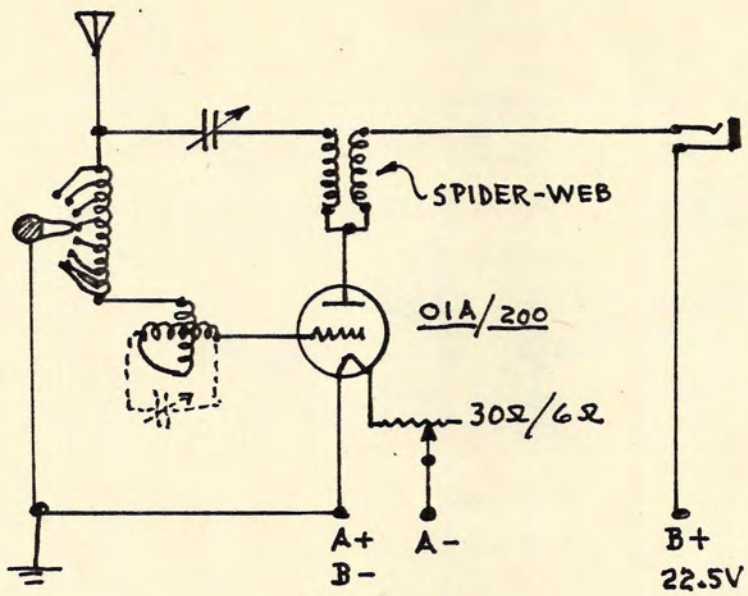

COIL DATA:

I.D. = 1½" Ø, 9 taps on each coil.
30T #24 DCC.

VARIO-COUPLER:

Ball-Rotor = 40T #22 DCC; 20 T per side.
Stator = 70T #20 DCC, tapt every 7T.

Higher wave-lengths may be secured by shorting the Rotor of the vario-coupler with a 23 Plate variable, as shown by the dotted line.

OPERATING PROCEDURES:

1. Turn rheostat to 50%.
2. Coils should almost be touching.
3. Give vario-coupler one full turn, to where set oscillates best.
4. Adjust tap switch and variable until station is tuned in.
5. Slowly spread coils until squeals fade, rather than turn rheostat down.

ADDING REGENERATION TO REINHARTZ SETS, 1924

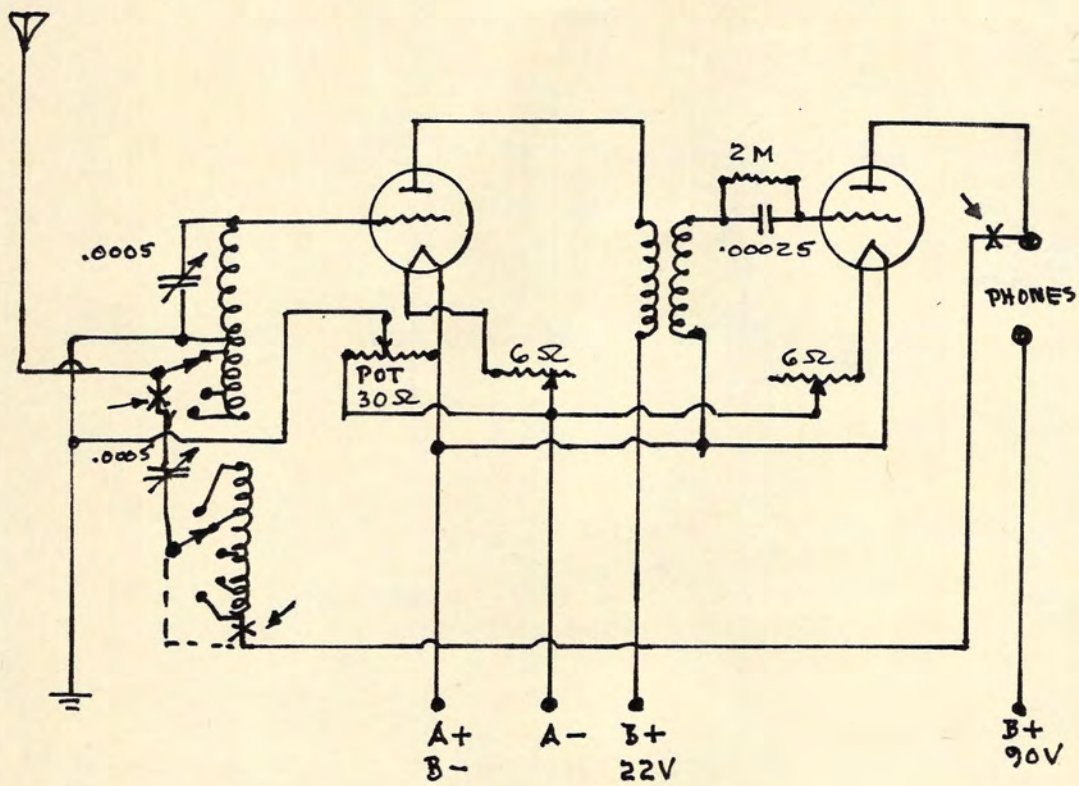

Dotted lines denote connexions of a regular tuned Plate circuit is used: if so, remove connexions at three places designated "X".

(CONSRAD PUBLISHING CO. (Gernsback) published a Booklet #4 in 1924, entitled "How to Build the Reinartz Receivers"; price was 25¢.)

MODIFIED REINARTZ CIRCUIT, 1925

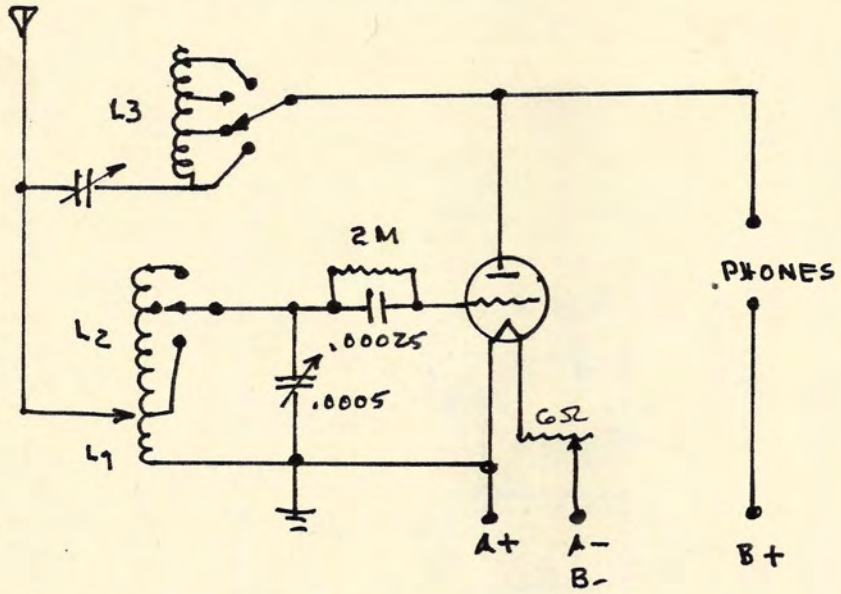

COIL DATA: L1 & L2 = #24 DCC, tapt @ 2,4,6,7,8,9,10,20,33 T.
L3 = #24 DCC, 45 T, tapt @ 15 & 30 T.

REINARTZ TUNER WITH 1-STAGE RF & DETECTOR

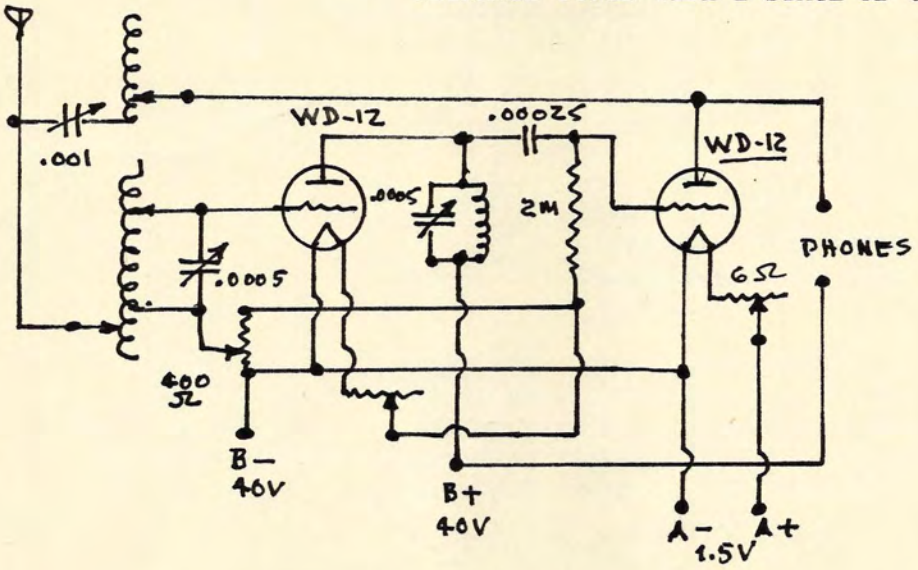

IMPROVED REINARTZ HOOK-UP, 1923

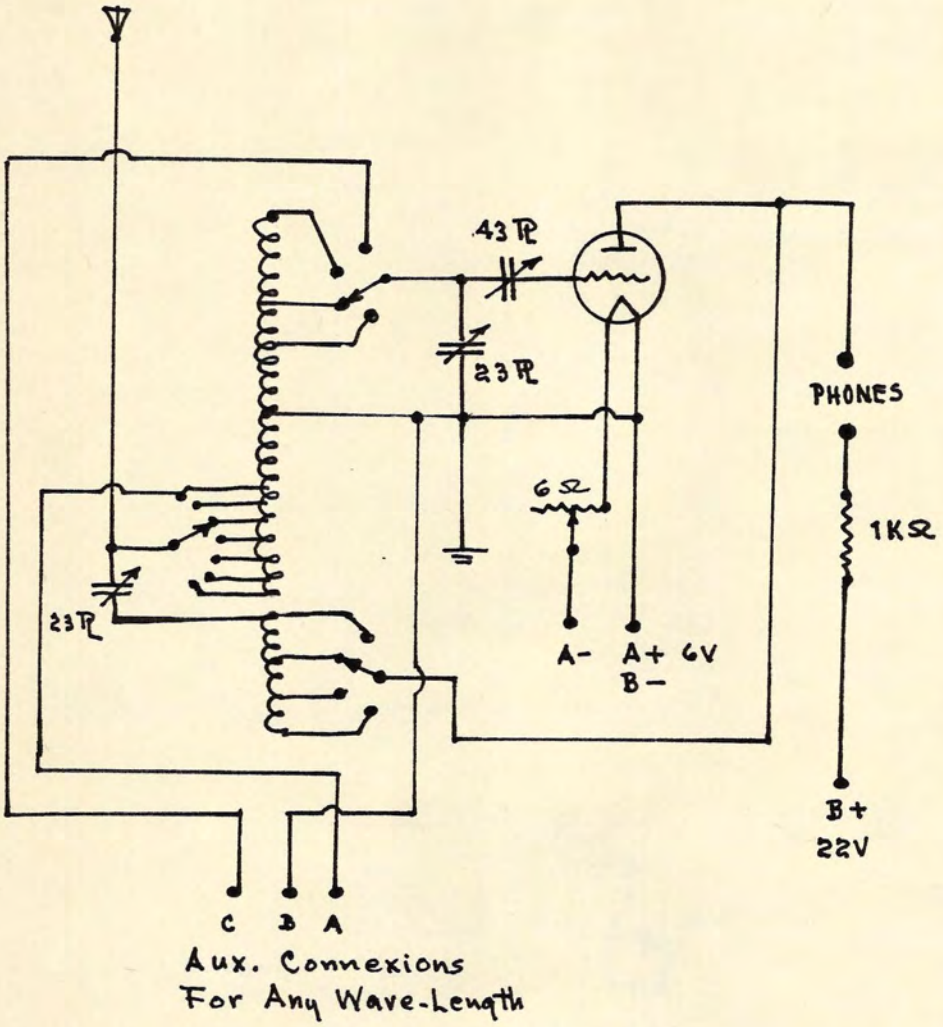

The TRISTAN SALES CORP., NYC, marketted the Reinartz Coil. Working with Reinartz in 1923, they came up with a new hook-up to take in the new wave-bands . The circuit was a collaboration between Reinartz and the TRISTAN engineer, Eugene T. Turney.

JOHN L. REINARTZ EN VILLE

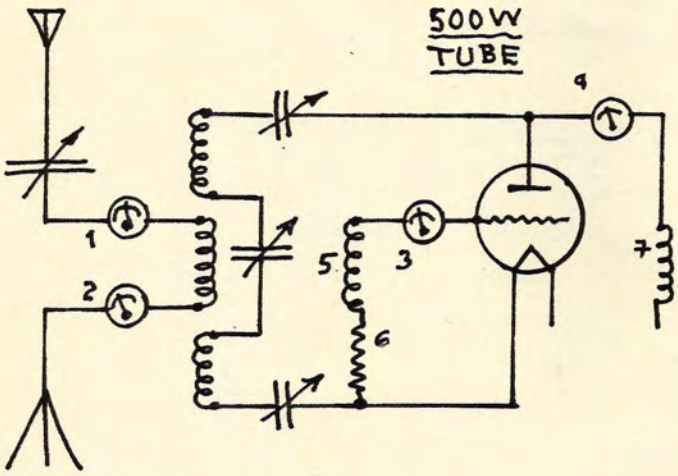

1. ANT METER.
2. COUNTERPOISE METER
3. GRID mAMMETER
4. PL mAMMETER
5. GRID CHOKE
6. GRID-LEAK
7. PL CHOKE

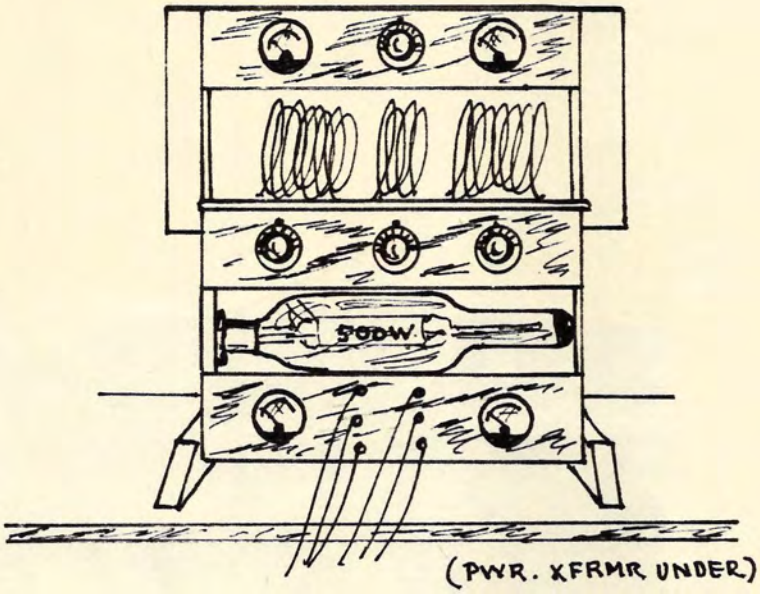

Reinartz's Transmitter In His Home in Connecticut, where He Lived After the Greenland Voyage.

ELGIN (1924)

Super-Reinartz

"The Ford of Radio"

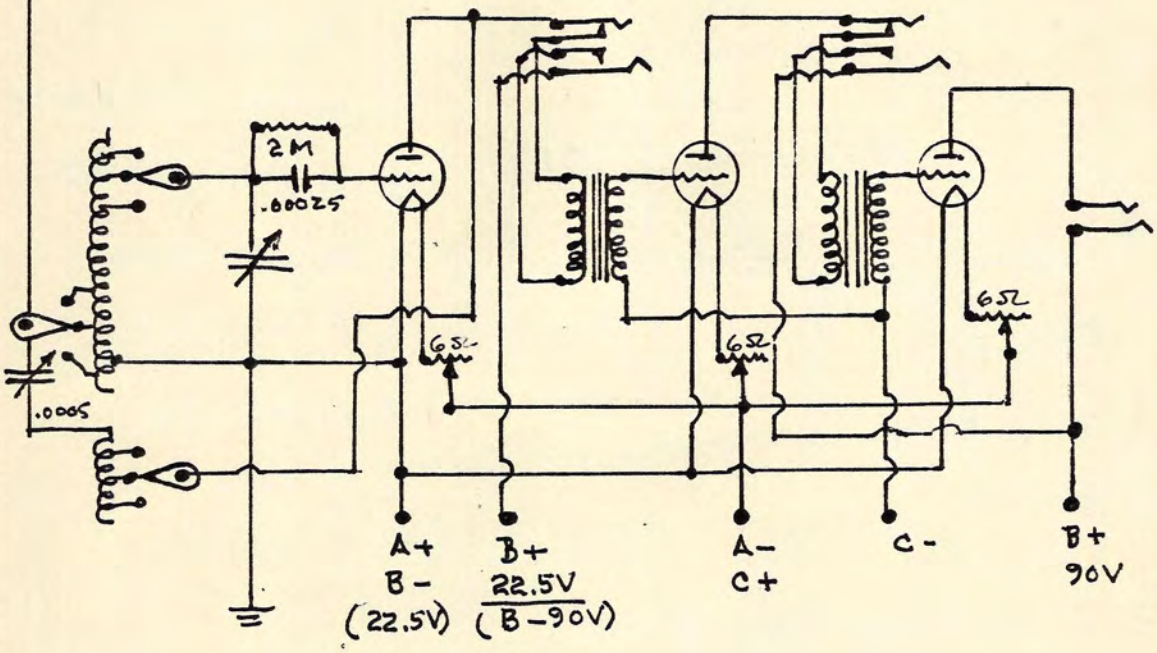

CONTROLS; Left to Right:

Tuning Condenser
Feedback Control
Phones

BOTTOM ROW:

Aerial
Detector
1st Amplifier
2nd Amplifier

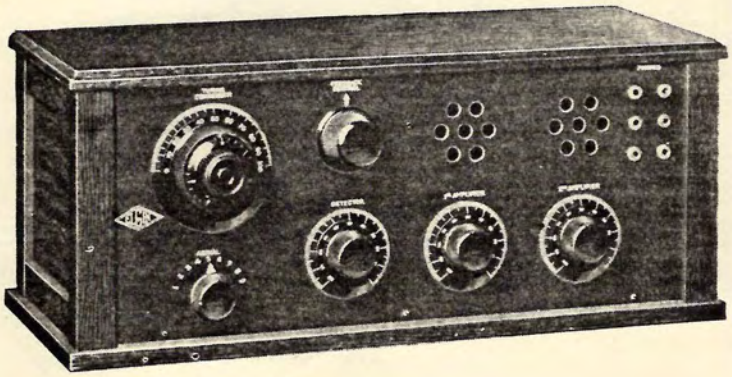

Elgin Radio Supply Co., Elgin, Illinois

A REINARTZ CIRCUIT W/ PLUG-IN COILS, 1924

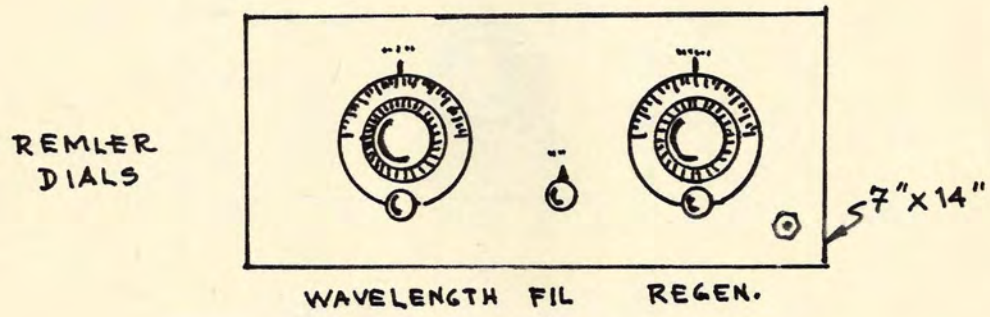

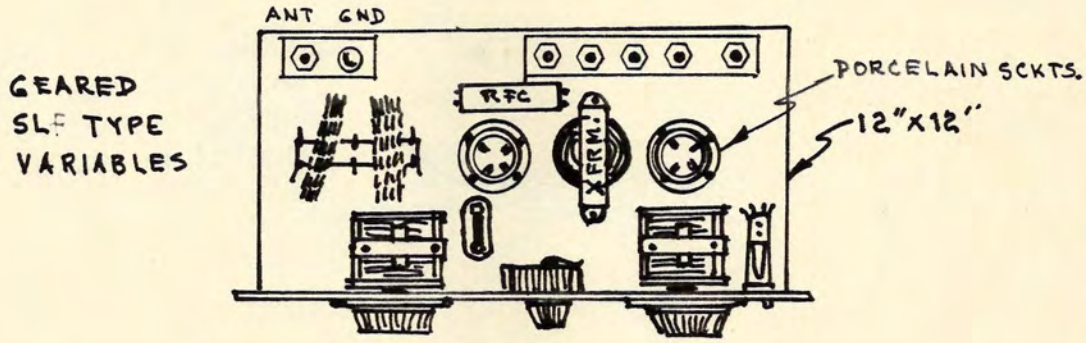

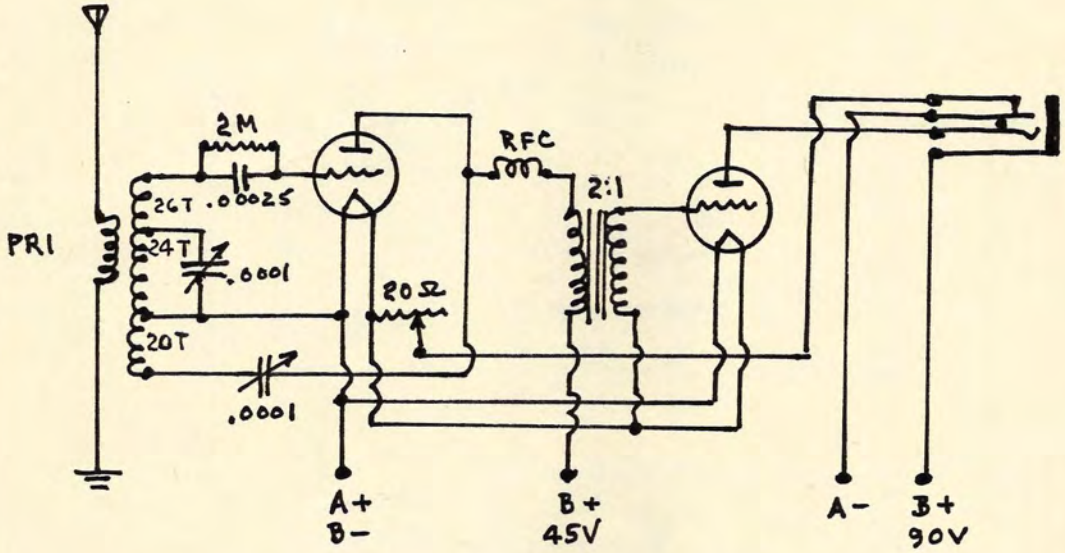

Basketweave Coils = #18 DCC, 3¼"Ø Form; PRI = 6 T; SEC = 24 T.
RFC = #24 DCC, 135 T on a 1½"Ø form.

HAYNES "DX RECEIVER", 1923, Sht. 1

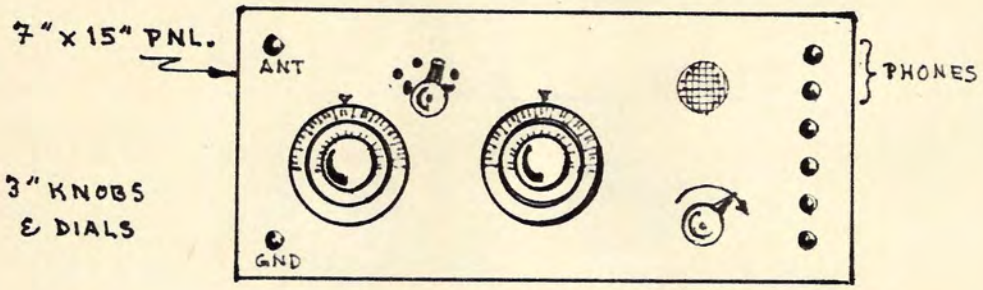

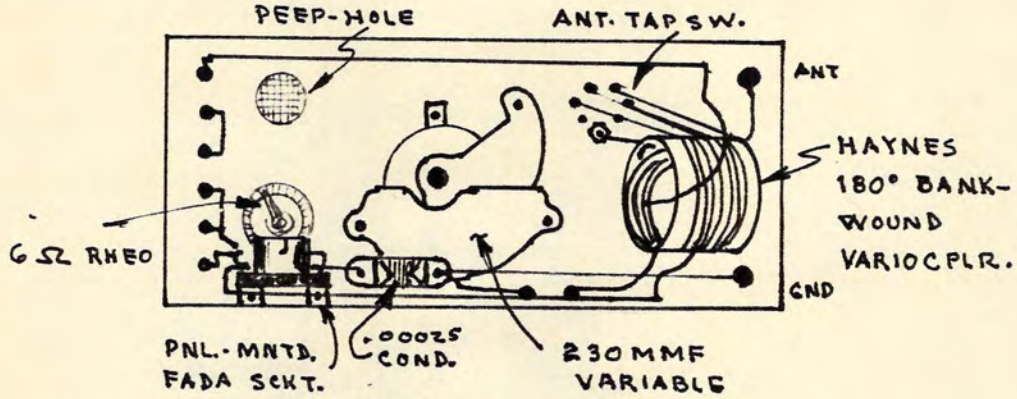

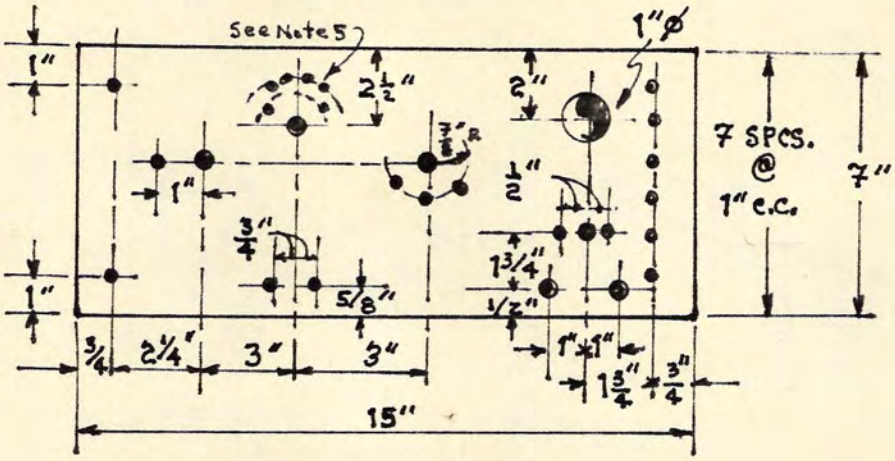

NOTES:

1. PRI. Circuit is semi-aperiodic.
2. ROTOR Should Have About 35 Turns.
3. VARIABLE Must Not Exceed 230 MMF.
4. Copper or Brass Lugs Recommended.
5. ANT. TAPS ON 1¼" R.; STOPS ON 1" R.
6. CSK. Holes WHERE REQUIRED, IF USING ORIGINAL PARTS.

(CB 11-23)

HAYNES "DX RECEIVER", 1923, Sht. 2

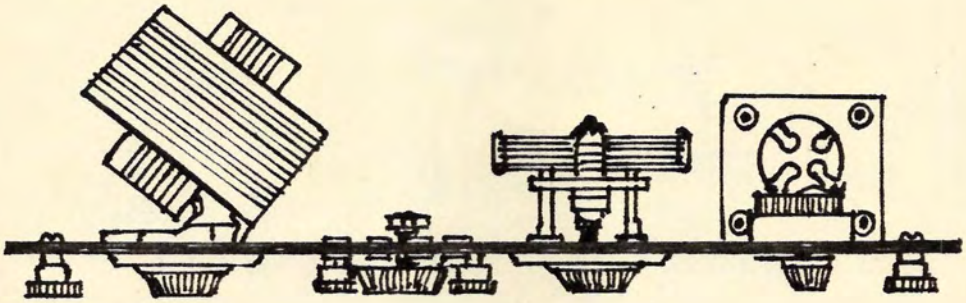

PLAN VIEW OF PANEL

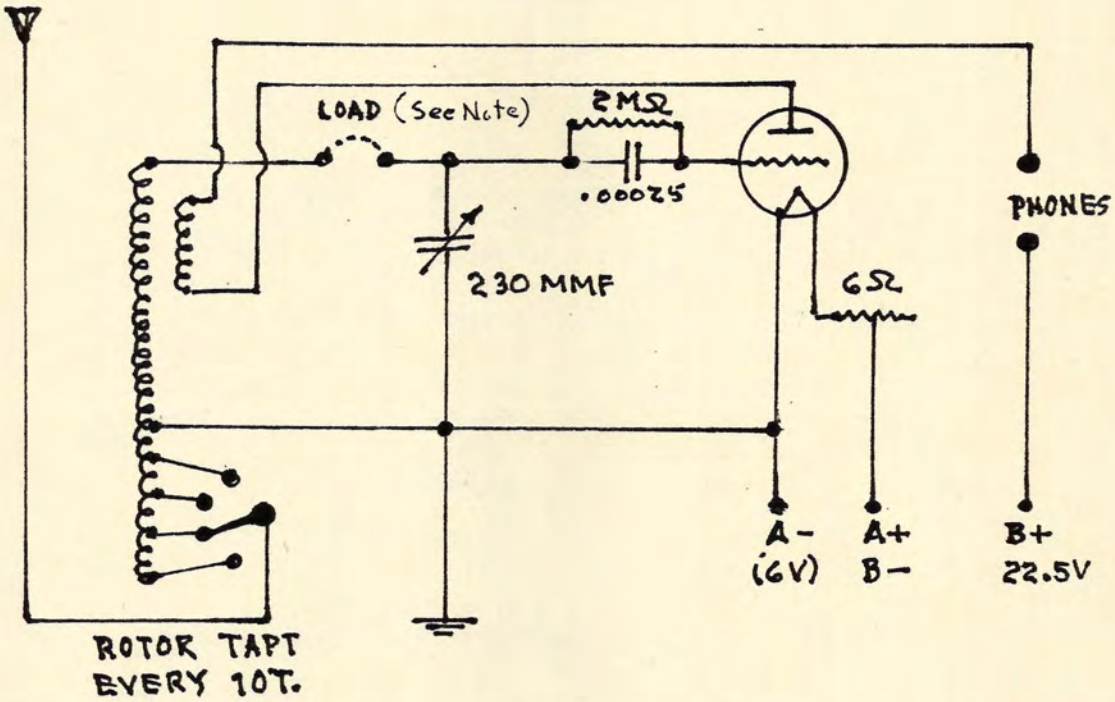

NOTES: 1. #14 hard-drawn, tinned copper wire used for hook-up, except ANT taps, which were flexible.
2. "LOAD" posts may be omitted unless you wish to listen above 550 meters.

TWO-TUBE RECEIVER, EMANON: 1924

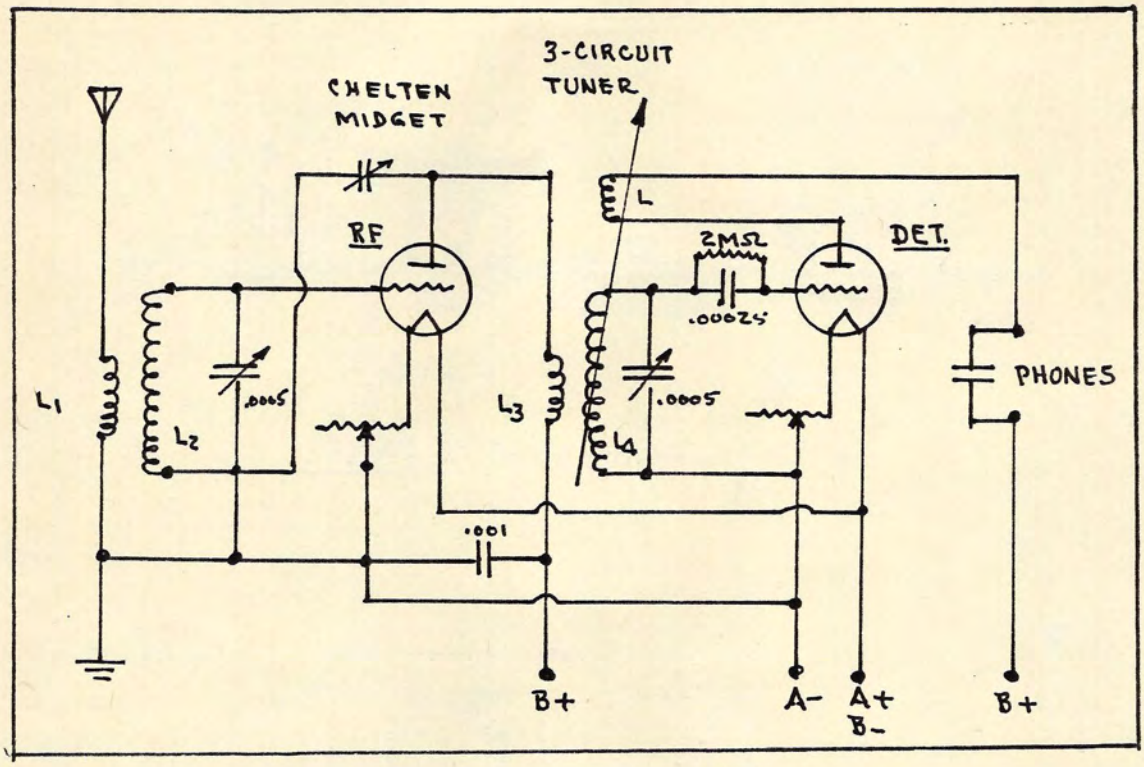

The Chelten Midget was a small variable, quite popular in the early Twenties, and was used as an artificial vernier (N/C).

Regeneration was in the DET.

COIL DATA:

3"Ø Coil Form; all windings on this form.

L = 40 Turns)
L1 = 12 ")
L2 = 50 ") #22 SCC
L3 = 14 ")
L4 = 55 Turns)
Spacing between L3-L4 = ½".

GERNSBACK's "MEGADYNE" REFLEX, 1932

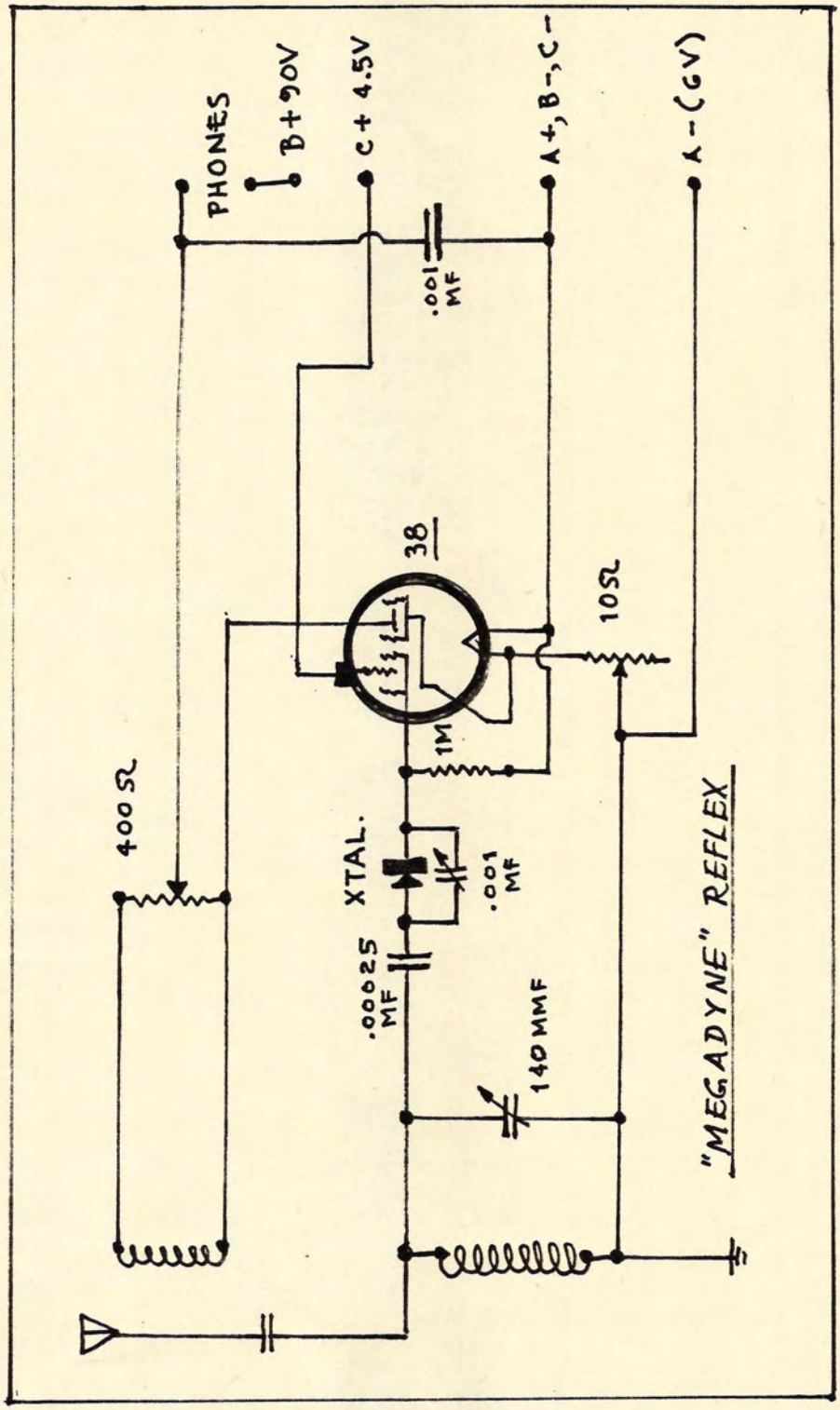

TROUBLE-SHOOTING EARLY REFLEX CIRCUITS WITH CRYSTAL RECTIFIERS:

AF XFRMR. DOES NOT REFLEX:	Disconnect Ant & GND; open xtl circuit listen for howl in head-set that will disappear when circuit is closed. If no howl is heard reverse PRI connexions of AF xfrmr. If no howl, replace xfrmr.
NOISES IN HEAD-SET:	If crackling is affected by tuning and disappears upon disconnecting ANT & GND, noises are caused by atmospheric conditions: no cure. If noises persist after disconnecting ANT & GND, they may be due to leakage from imperfect contacts, defective insulation, or defective A or B batteries. With tube not burning, plug in head-set. If cracking is heard, trouble is short-circuit, or leaky by-pass.
CARRIER WAVE WHISTLE:	This is due to an oscillating tube. Try increasing coupling or re-arranging the placement of parts.
DISTORTED SIGNALS:	Improperly tuned set: reduce angle between rotor & stator of Variocplr. Crystal could be defective. Xfrmrs. are not synchronising received and reflexed currents having the same phase characteristics: replace xfrmrs.
LOUD HUM IN HEAD-SET:	Disconnect ANT & GND: if hum stops, it is due to near-by power lines: relocate ANT. If hum persists, grid circuit of one tube is open.
HOWL WHEN MOVING COUPLER OR VARIABLE:	Rotor too loosely coupled. Reduce the angle between them.
BODY-CAPACITY:	Variable condensers are improperly connected. Check connexion at end of shaft supporting rotor plates. Otherwise, move variable back from panel and use a shaft-extension coupling.
HOWL IN 3rd TUBE:	Remove second tube: if howl persists reverse PRI or SEC connexions to 2nd AF xfrmr. NOTE: this type of howl is not the same as a reflex howl caused by opening the xtl. circuit.

60-CYCLE HUM:

Invariably an adjoining light or power circuit. Try removing condenser from the PRI of the AF xfrmr; disconnecting ANT lead from rotor-to-aerial. If this weakens signal, insert .002 mfd fixed condenser between "G" on AF xfrmr. and "G" on RF xfrmr.

CRYSTAL TESTS:

Many makes of early crystals would pull in local stations but fail to get distance. To test crystal for distance, turn rotor of vario-coupler nearly 90° to the stator, and slowly revolve the variable condenser. If crystal is o.k., a howl will be heard at some point. The howl will increase when the cat-whisker of the rectifier is lifted. If the howl is heard when the whisker is lifted but not when it is replaced, change the position of the whisker until a satisfactory adjustment has been obtained. If this fails, replace the crystal

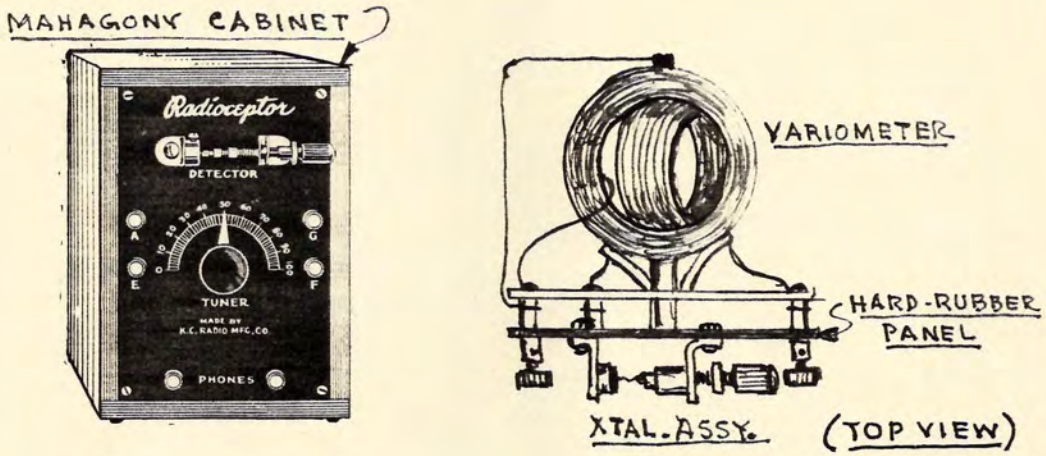

"RADIOCEPTOR", 1922: K.C. RADIO MFG. CO.-$7.50

KENNEDY SW. RECEIVER, 1923

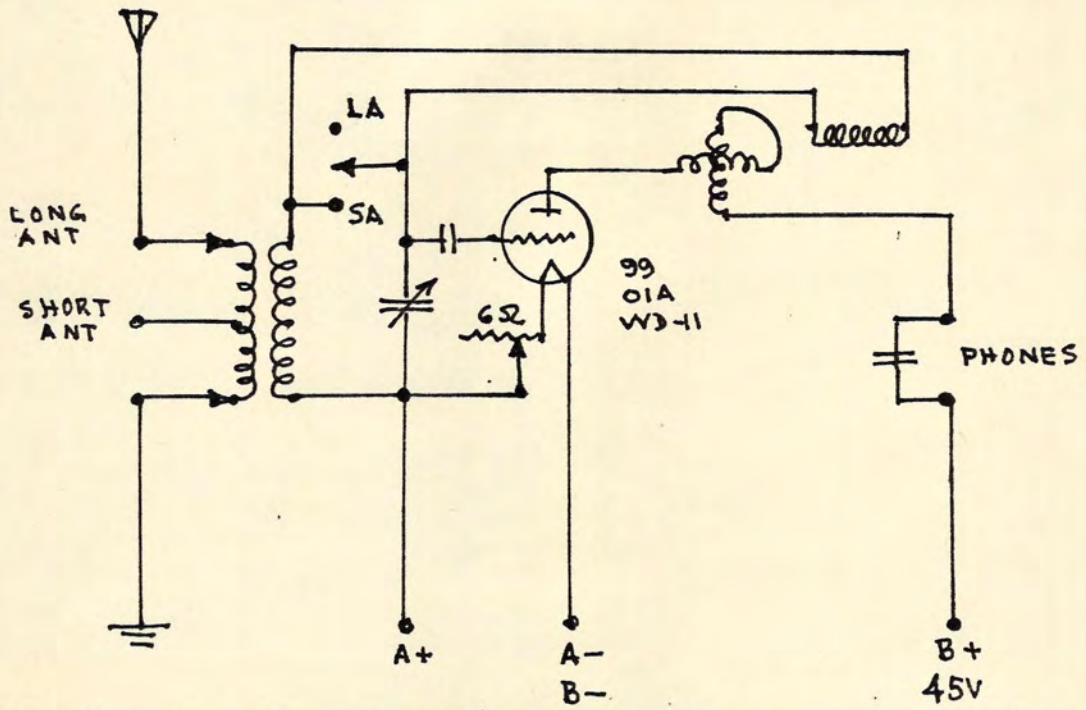

THE "ULTRADYNE" PRINCIPLE HOOK-UP FOR C.W.

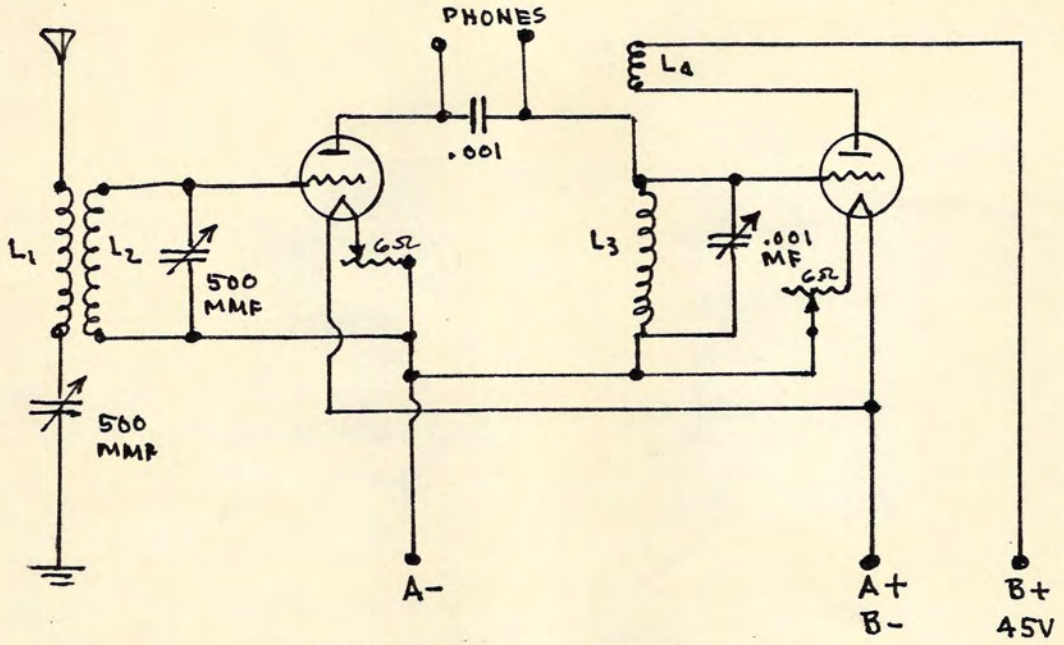

Honeycomb coils employed; L1-L2 may be a Variometer.
L3 & L4 may be a 50 T & 25 T Duo-Lateral coil.

R.E.L. "LOPEZ" LOW-LOSS TUNER, 1924; $10

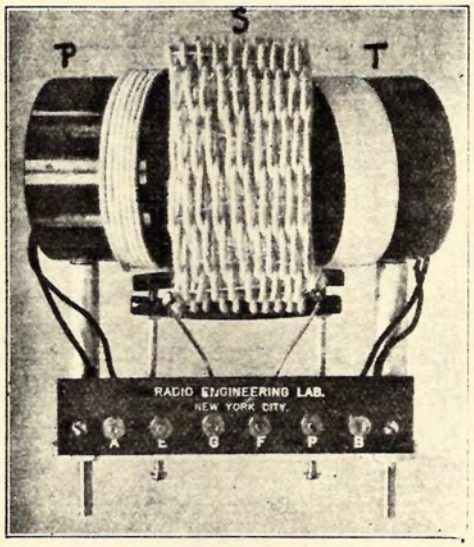

Low Range: 150-400 Meters.
High Range: 220-600 Meters.
.0005 Variable Condenser required.
R.E.L. RF Coil required, with ANT taps.
Can be used with 3 or 4-tube sets.

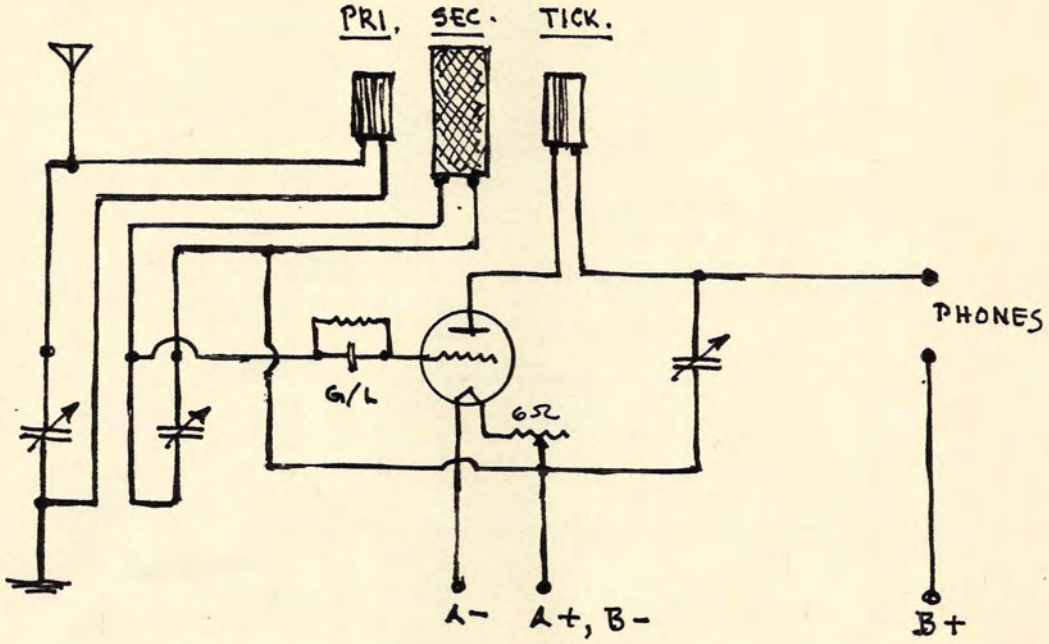

SODION TUBE CIRCUIT #1

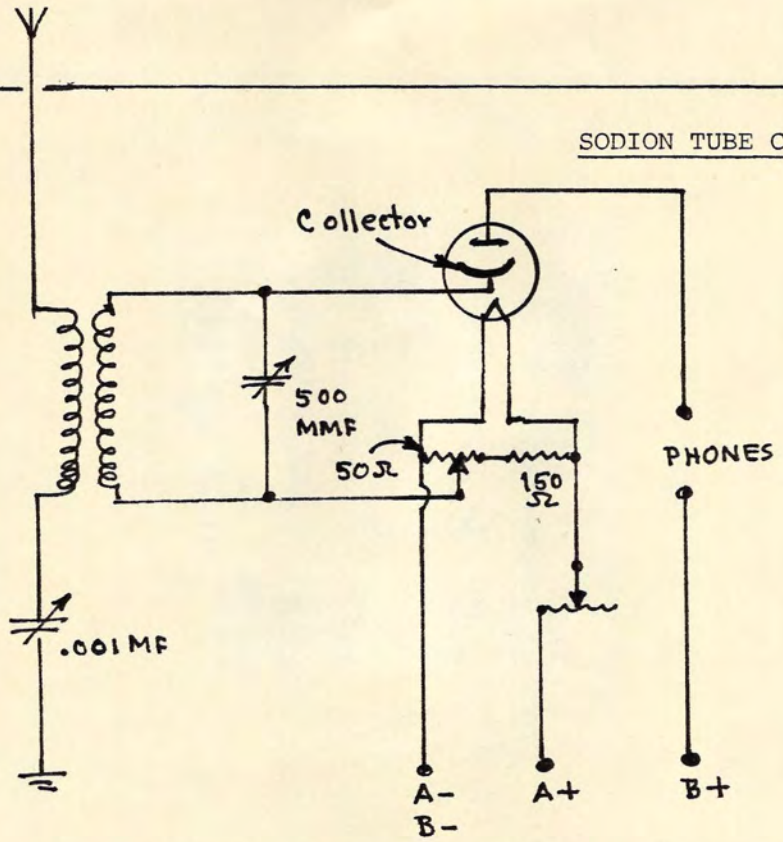

Loose-coupling is mandatory. Circuit is very sensitive on weak signals. Will not oscillate, radiate, or regenerate.

SODION TUBE CIRCUIT #2

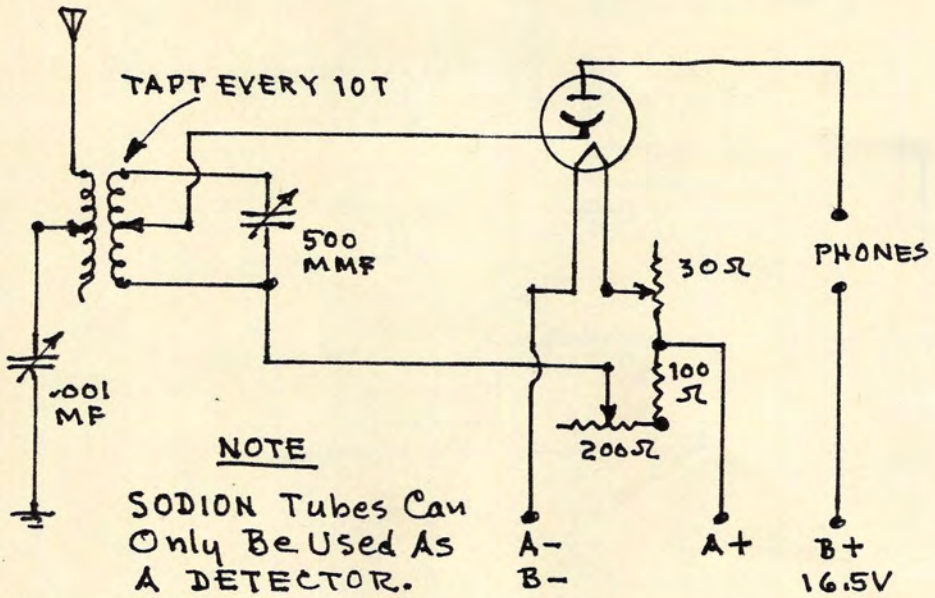

ED MODULAR UNITS, 1922

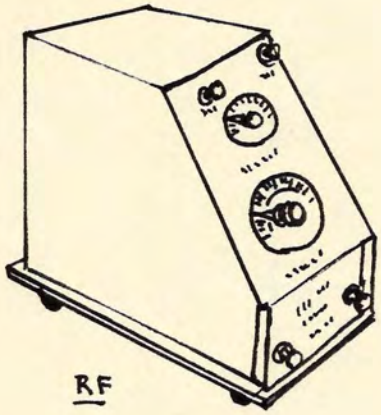

RF

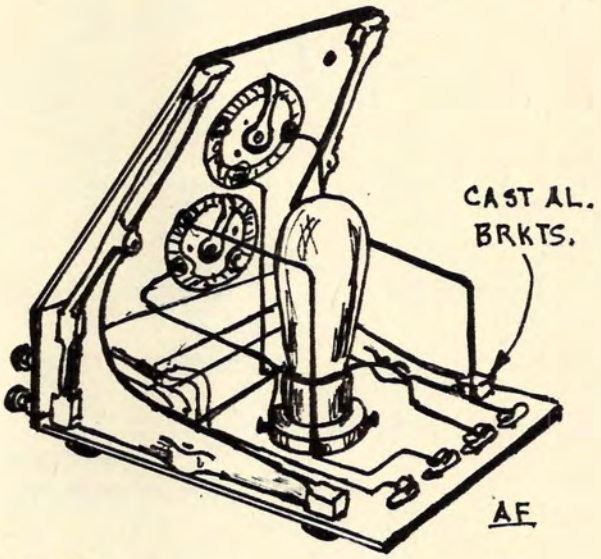

AF

ED MFG. CO.
"BUG"

150 - 300 METERS
BANK-WOUND TUNER

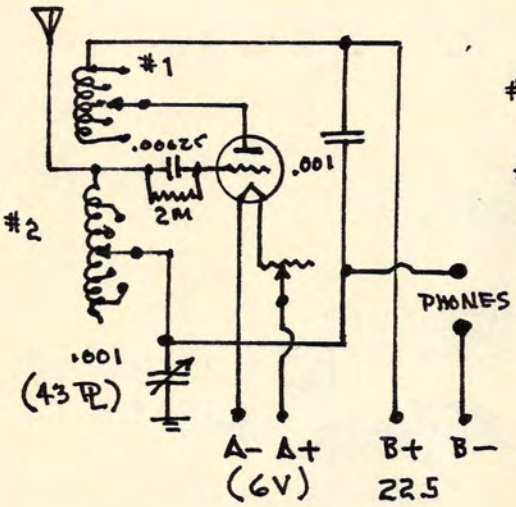

COIL FORM = 3¼"Ø x 8"
#1 COIL = #21 SCC, 80T, TAPT @ 20,25,30,35,40,50,60T.
#2 COIL = 100T, TAPT @ 20,30,40,50,60 (Ends of wires connected to last tap, both ends.)
TUBE = Meyer, W.E. "J", G.E.

(See Also Conn. Tel. 1-Tube Unit In Vol. II.)

RF SEXION

ONE-TUBE "DX WONDER", GELULA, 1924;Sht.1

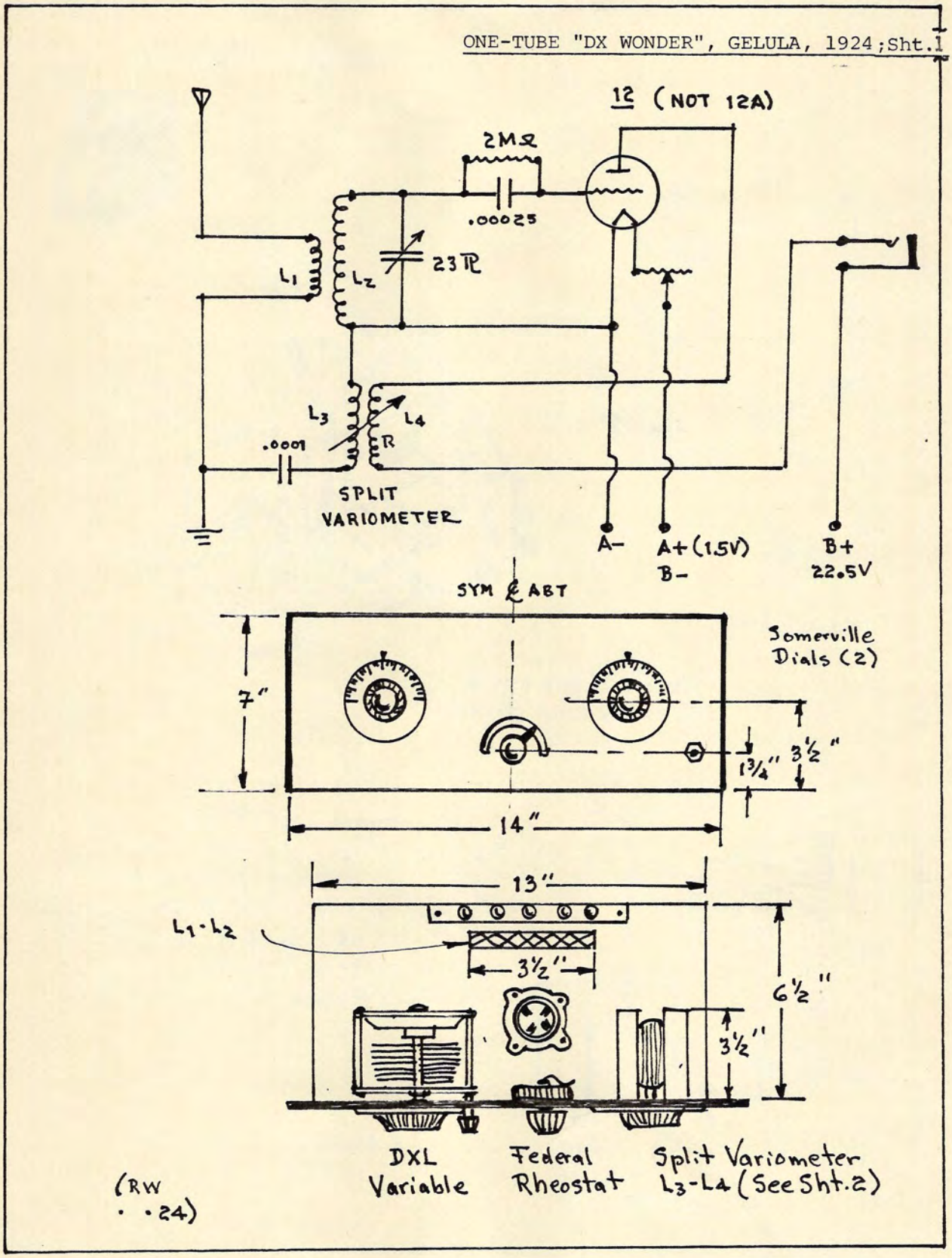

ONE-TUBE "DX WONDER", GELULA, 1924;Sht.2

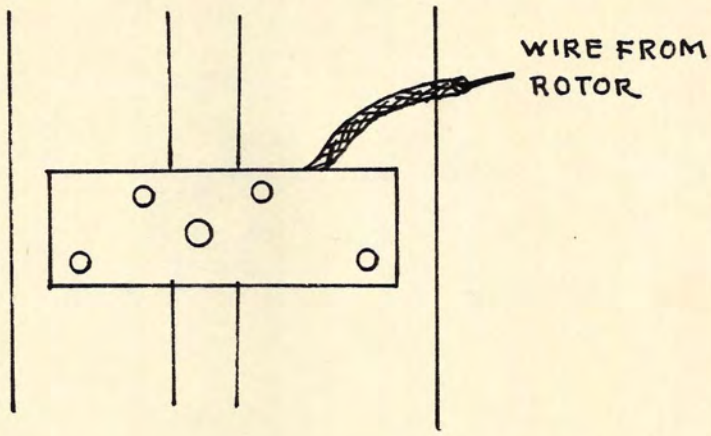

HOW TO SPLIT A VARIOMETER THAT USES FRICTION CONTACT ~

1. Remove end-plate.

2. Insulate wire underneath end-plate and bring out over plate.

3. Wire must not touch end-plate.

COIL DATA:

Coil was Spider-Web Type, 5" Ø.

L1 = 8 Turns)
L2 = 45 Turns) #22 DCC. L1 wound over L2.

L3 =)
L4 =) Split Variometer.

TUNING:

Turn rheostat full CW.
Turn Variometer rotor carefully.
When rushing sound is heard, decrese rheostat.
Tune Variable slowly.
After finding station, trim with Variometer.

"HETEROPLEX" COIL NOTE, 1923

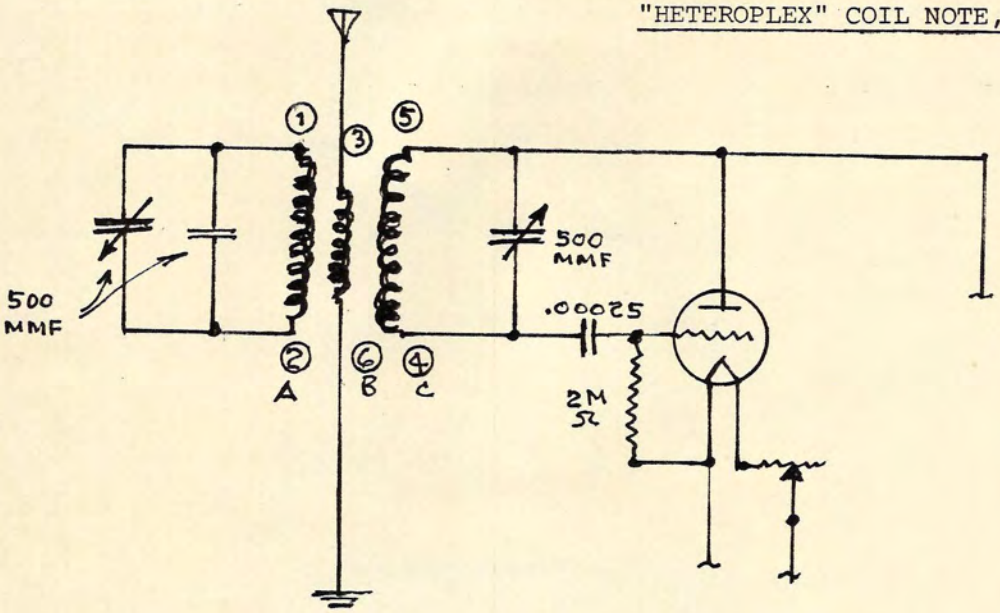

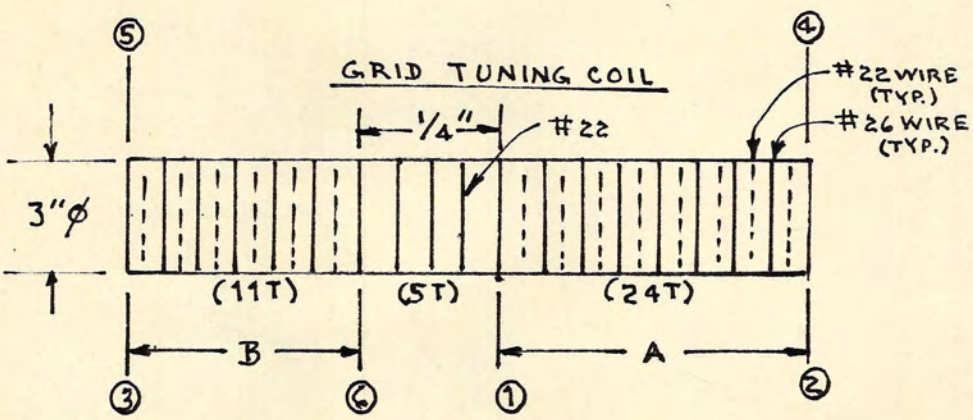

COIL DATA:

1. Wrap coil form with #22 and #26 wire simultaneously: total of 80 turns - 40 turns each.
2. Count down 11 turns from (5) and cut #22 wire.
3. Count down 24 turns from (4) and cut #22 wire.
4. Throw away remaining 5 turns of #22 wire.

WESTINGHOUSE R.C.: 1922; Note

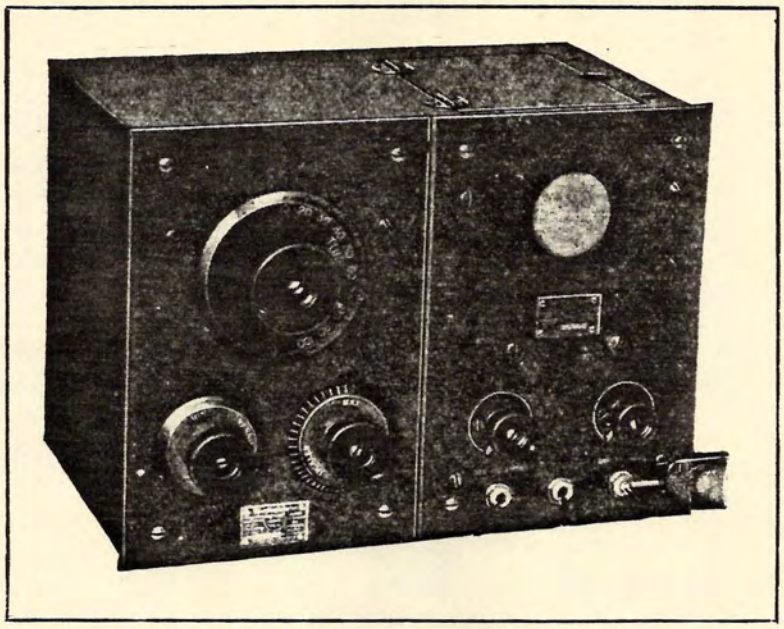

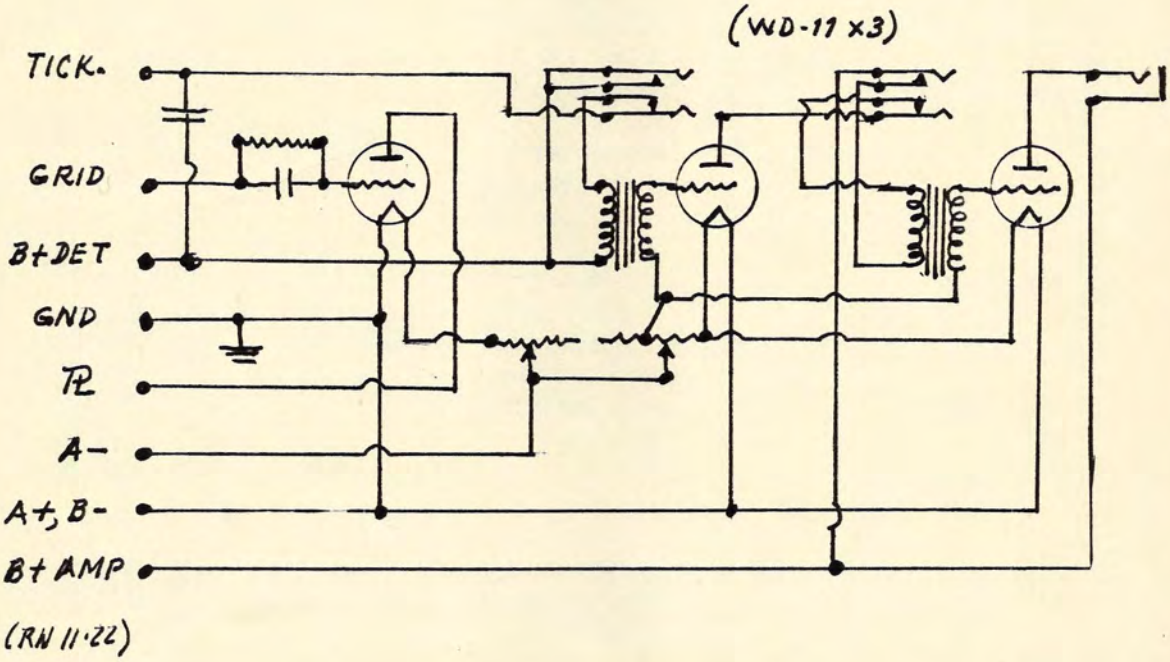

HAZELTINE'S NEUTRODYNE CIRCUIT

Probably the first truly major advance in early radio circuitry occurred on the 27th of March, 1923, when Prof. L.A.Hazeltine was granted a patent on his "Neutrodyne" concept - thereby precipitating years of legal controversy, chiefly instigated by RCA or its flunkys to have the professor's claims invalidated, without success.

Technically, the Neutrodyne was a circuit that neutralised the inherent coupling capacities of both vacuum tubes and their associated circuits; thereby eliminating distortion due to regeneration, local radiation, and, more importantly, perhaps, no whistles or oscillation was heard when the dials were rotated. In other words, there was no need to make a compensating change in other dial settings. This naturally permitted an accurate logging of signals received.

Another benefit of the Neutrodyne circuit, not originally conceived of, was the fact that it permitted you to re-activate 01A tubes in the set, itself, which is described farther along.

The angle of placement of the so-called Neutroformers was highly critical in the beginning, and the adjusting process before turning on the receiver was precise and mandatory. In other words, you could not be impatient with the Neutrodyne set-up. The Neutrodyne schematic shown over-leaf is of the FADA "160" receiver, which may be considered as being a-typical of the circuit. FADA, incidentally, was probably the strongest booster of the Neutrodyne.

The placement of parts, other than the Neutroformers, was conventional enough, as shown on the schematic. The balancing-out procedure, as it was called, proceeded as follows:

PURPOSE: The balancing-out process consists of exciting the coupled receiver with a strong signal and then neutralising the tube and circuit capacities, preventing this signal to be heard through the circuits. The adjustment is for a minimum signal. The process is carried out with the tube filaments cold.

PROCEDURE:

1. Refer to the Adjustment Circuit, with is an external circuit required to be made-up by you. It consists of an inductance and a variable condenser excited by a buzzer, and coupled to the ANT terminal of the receiver.

2. Place the Adjustment Circuit 10 to 15 feet from the receiver.

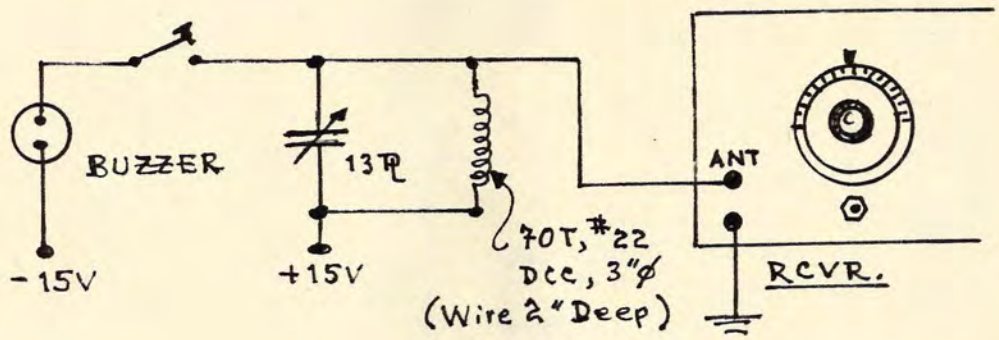

Be sure the set is grounded to earth.

3. Start the buzzer of the Adjustment Circuit going, then turn on FIL switch.
4. Adjust DET rheostat to a point just before a frying sound is heard.
5. Rotate the three Neutroformer dials to pick-up the buzzer.
6. Variable of the Adjusting Circuit should be placed at approximately 15 - 20-degrees.
7. Rotate receiver dials until buzzer signal is strongest.
8. Remove 1st RF tube from its socket.
9. Re-adjust all three dials of the receiver until the buzzer signal again comes in strongest.
10. Immobilise one FIL prong of the 1st RF tube by inserting a piece of paper around the pin.
11. Replace the 1st RF tube in its socket.
12. Signals may still be heard in the phones or speaker; adjust the first (LH)"Neutrodon" for weakest signal, or none at all.
13. Remove the 1st RF tube again: signals should come in as strongly as before.
14. Replace tube in its socket, with paper intact: signals should weaken or disappear.
15. This is the desired condition, and the "Neutrodon" may be soldered at its final position.
16. This covers the neutralising adjustment of the 1st RF tube. The identical procedure is followed for the 2nd RF tube, adjustments being made with the second "Neutrodon".
17. It is important when adjusting the "Neutrodons" that all three dials on the front panel are adjusted for maximum signal strength BEFORE final neutralisation is made.

The "Neutrodon" condensers have three terminals. It is sometimes advantageous to connect one terminal and the center terminal, rather than connecting to both end-terminals. This gives a greater capacity range to the condenser, and usually reduces test-signals to inaudibility.

FADA 5-TUBE NEUTRODYNE Model 160, 1923

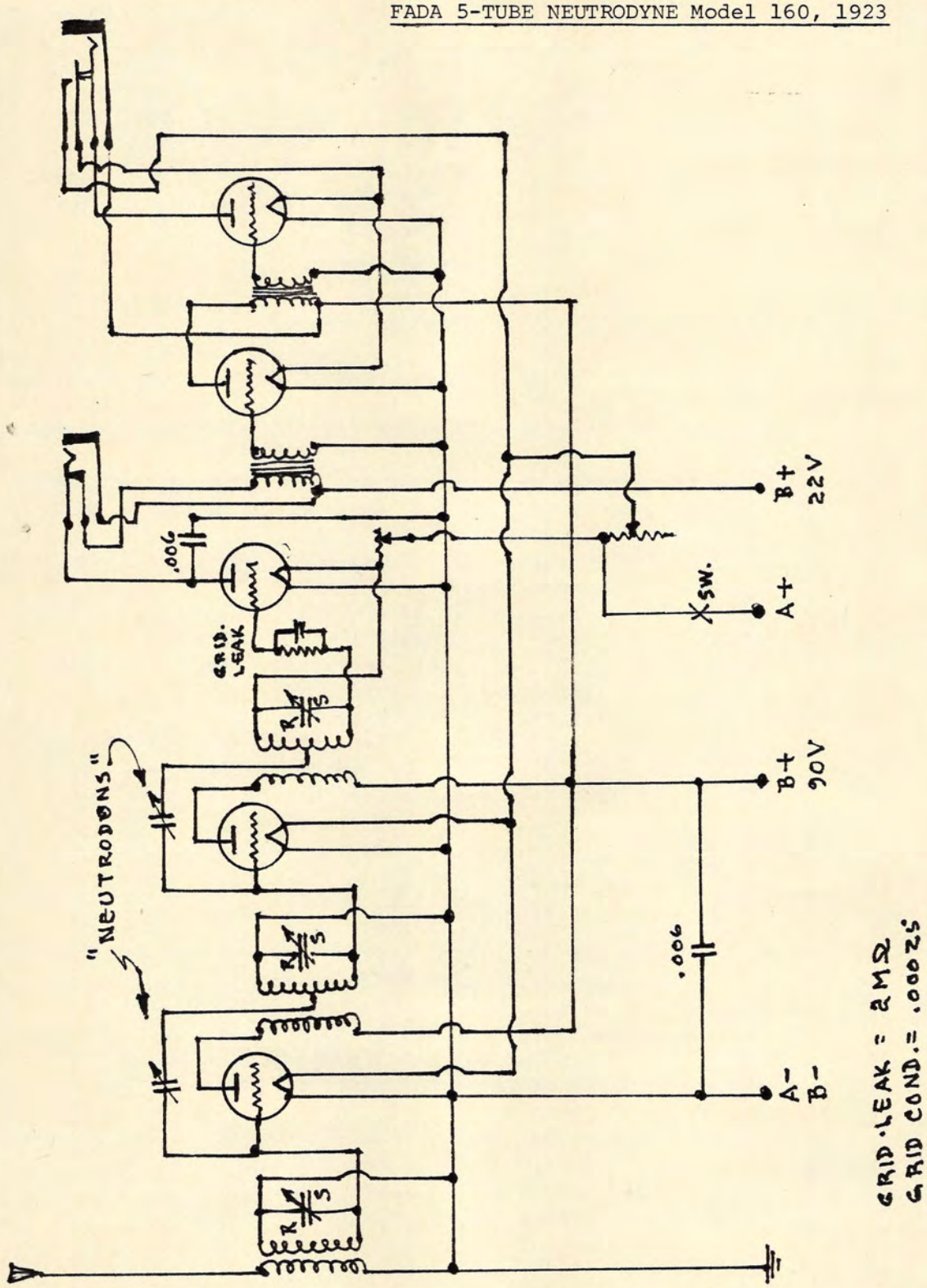

CHANGING THE CAPACITY OF "NEUTRODON" NEUTRALIZERS

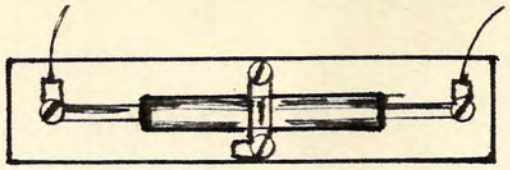

MINIMUM RANGE

INTERMEDIATE RANGE

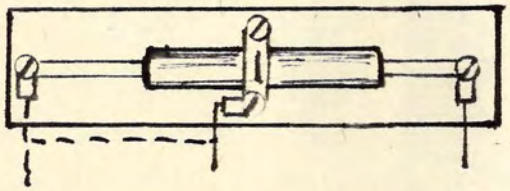

MAXIMUM RANGE

——— = STANDARD CONNEXION

- - - - - - = CONNECTING WIRES

RE-ACTIVATING 01A TUBES WITH A NEUTRODYNE RECEIVER:

This procedure was originally conceived of by engineers working for Stromberg-Carlson in 1924. It is applicable ONLY to Neutrodyne sets.

1. Connect a 15V source to the FIL prongs of the 01A for 30 secs.
2. Insert tube in its socket, and disconnect all "B" leads.
3. Connect regular "A"-battery and set rheostats at 75 & 40.
4. Plug in speaker at 2nd AF jack; turn on "A" supply.
5. Allow tube to remain lighted 10 to 30 hours.
6. Turn set off and re-connect "B" supply, making certain that the "A" supply is fully charged.
7. If tubes have served their useful life, do not attempt to re-activate them.

WARNING: All good tubes must be removed from set before inserting tubes to be re-activated!

NOTES ON THE PLACEMENT OF NEUTROFORMER COILS

The Neutroformer is essentially a TRF xfrmr. unit, consisting of 2 inductances and a variable condenser.

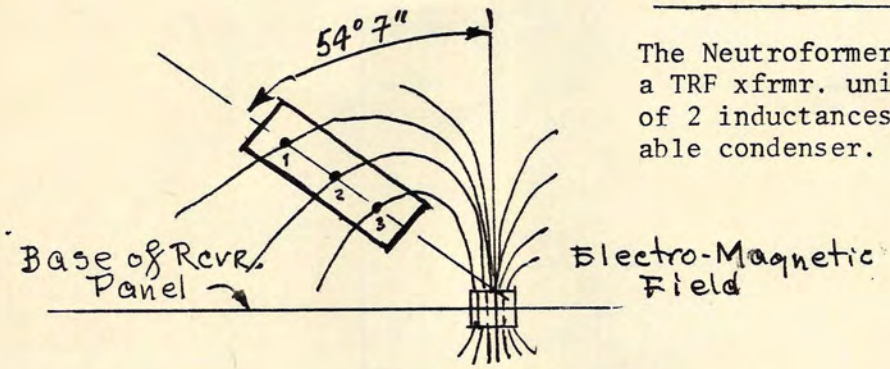

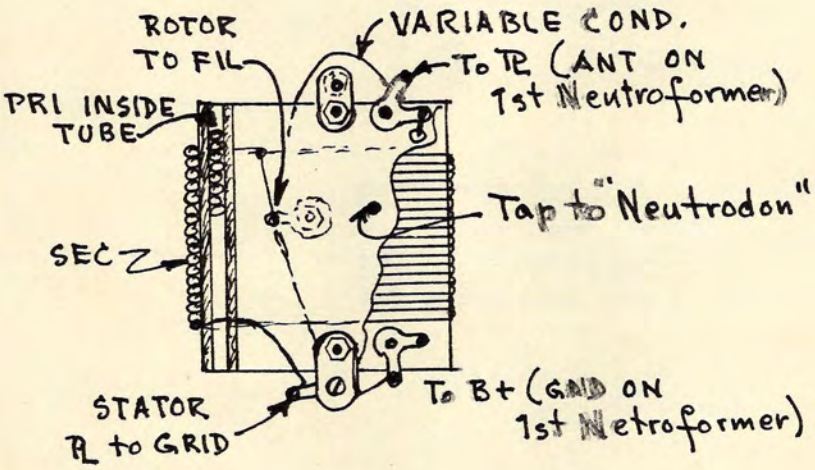

NEUTROFORMER CROSS-SEXION

The angle at which Neutroformers are placed is highly critical: the 54° 7" being absolutely mandatory for the early circuits.

If the set is inoperative at the upper end of its range, carefully check the Neutroformer angle, as this was 90% of all troubles of these circuits. An erroneous placement that is off only by 2° would produce inexplicable difficulties.

If at any particular frequency one dial reads considerably higher than the other, check for a short-circuit in the SEC winding of the Neutroformer.

STEINITE CRYSTAL SET, 1928 ($6.00)

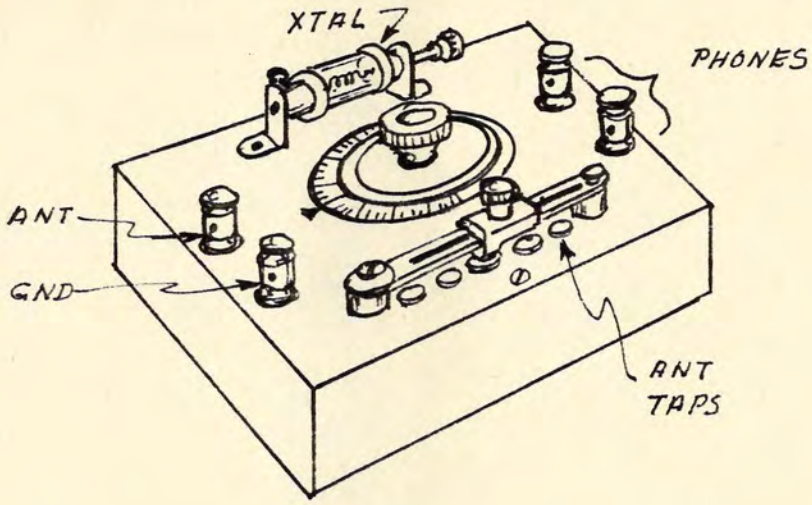

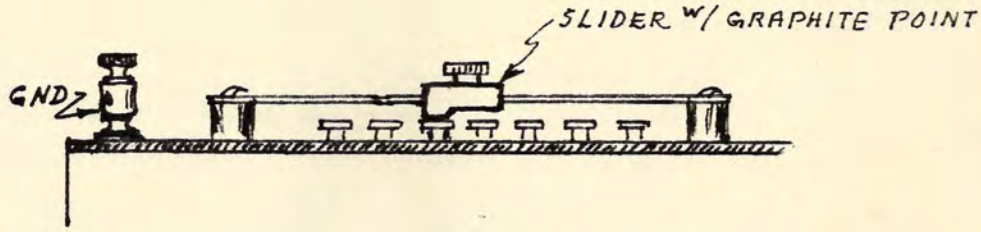

Fred W. Stein is probably an excellent example of the "anything-is-possible" attitude that marked the American psyche after the turn of the century. Born in Kansas in 1888, he taught himself electrical engineering, and was fascinated by the properties of galena crystals, which he went into business to sell around 1908. One thing led to another, and after the Kaiser's War, Steinite Laboratories was born.

His initial offering of a crystal set is depicted above, and thousands were sold. His "interference trap", depicted on another page, was sold around the world and was popular from 1924 through 1926. He designed and produced a one-tube, two-tube, and five-tube set quite successfully. The "Steinite" was his most popular set, an AC set using 99 tubes and an intergral power supply. It was neither better nor worse than a myriad of other sets of the time, but was a clean design and easily manipulated by inexperienced owners.

After acquiring 1,180 employees and producing 20,000 sets a month, he sold out in 1929. An atypical pioneer.

(1923) NORTHERN ELECTRIC R-11 "Peanut Tube" Rcvr.

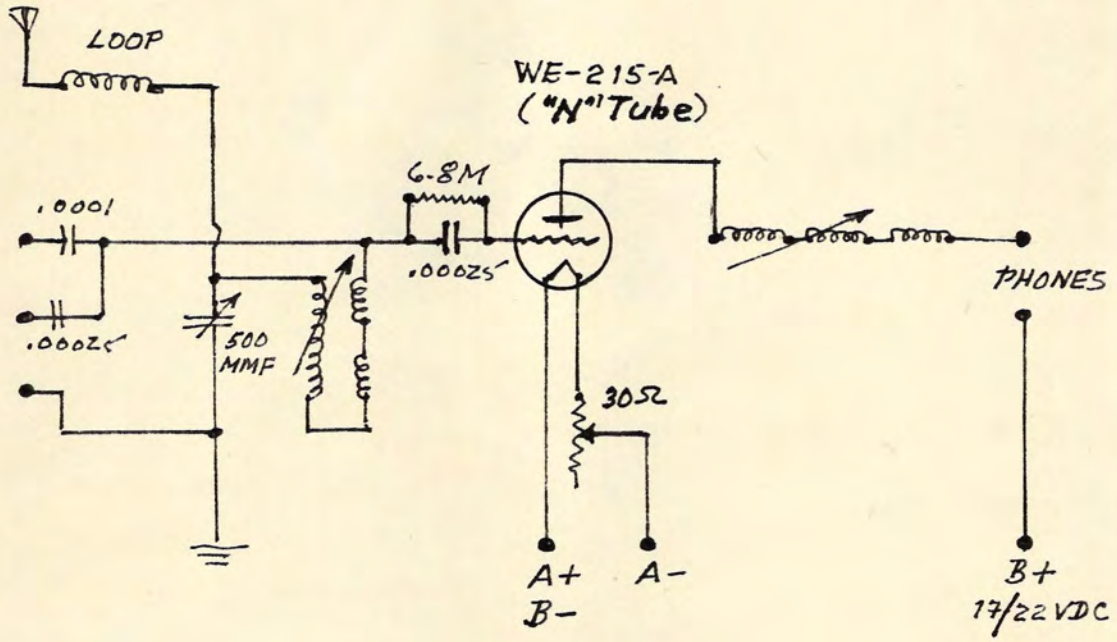

NOTES: 1. A #6 dry-cell would energize the FIL for 100 hrs.±.
2. Similar to Radiola III, w/ variometer windings in opposite direction from RCA, making for opposite polarity.
3. Phone posts may be connected to the R-15 amp., shown below.
4. Would cover 200 to 600 meters.

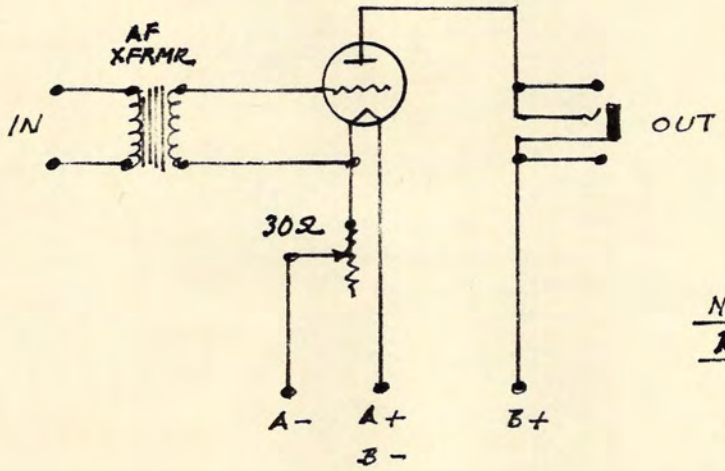

NORTHERN ELECTRIC
R-15 AMPLIFIER

MARCONI Model 106D 3-TUBE RECEIVER, 1924

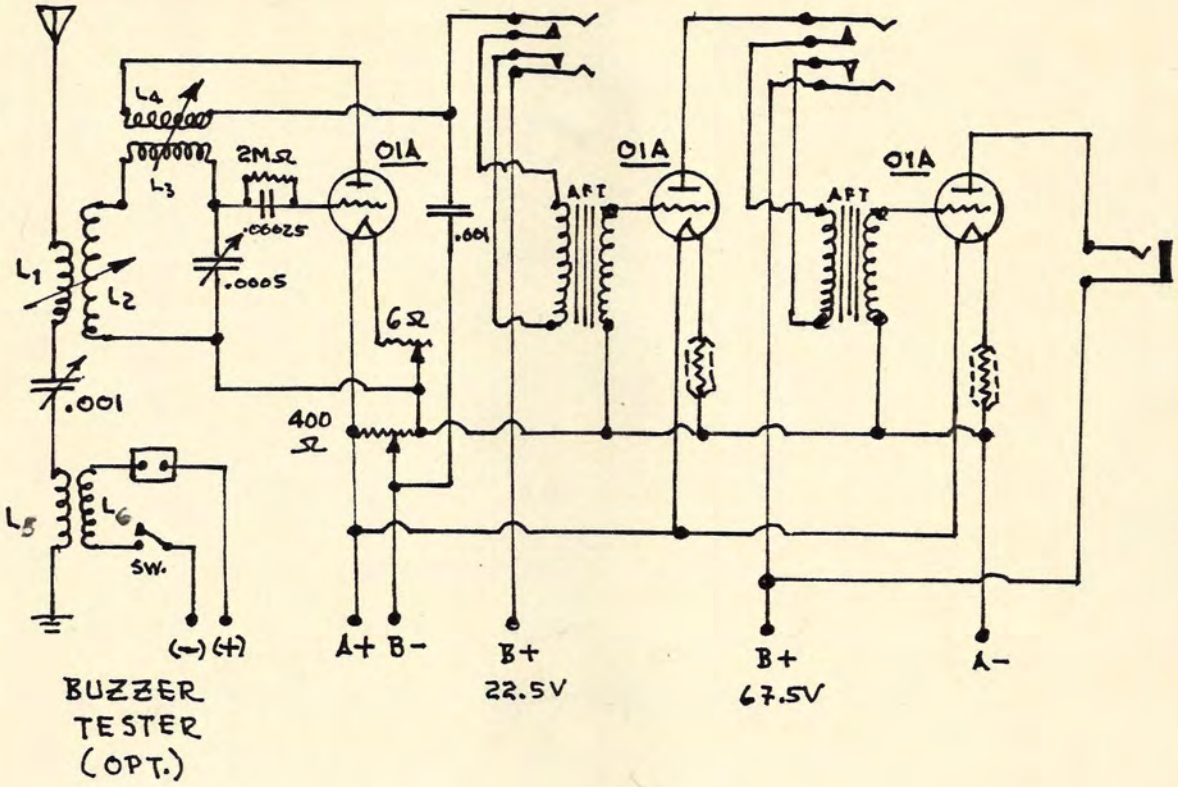

Original price in England was $700 U.S.
01A Tubes Substituted for Marconi Valves.
Buzzer tester may be omitted if BCL only is wanted.
Cabinet O/A Dimensions = 16" x 10" x 8".
Panel = 16" x 7" x 3/16".
Baseboard = 15" x 9" x ½".
COIL DATA:

(2) 3"Ø x 3" for L1 & L3.
(2) 2"Ø x 2¼" for L2 & L4.
#22 DCC Wire.

L1 = 9 Turns
L3 = 36 Turns

L2 = 36 Turns
L4 = 45 Turns

L1 & L2 should be mounted at right angles to L3 & L4.
L5 & L6 wound on seperate 3"Ø forms, 5 Turns each of #14 insulated wire. Buzzer determines if coils resonate.

MARCONI Model 106D 3-TUBE RECEIVER, 1924
(Sht. 2)

GENERAL NOTATIONS

1. A 200 tube may be used in the first socket as a Detector.
2. If signals are weak, try reversing leads to L2 & L4.
3. The pot. is used to control oscillations of tubes.
4. If spilling over occurs, remove .001 condenser.
5. If audio howl occurs, insert .001 condenser across the SEC of both AF xfrmrs.
6. A "C" battery may be used, if desired; connexions should be at the A- terminal of the Amperites.
7. ANT should be no longer than 75'.
8. GND is critical to this set.
9. Do not use buss-bar when wiring; use #14 bare copper wire.
10. Louder signals may sometimes be secured by reversing the A-battery leads.
11. Tuning is very sharp and a vernier dial is recommended.
12. Range of reception is approximately 2,000 miles.
13. Use of the Buzzer Tester is applicable to xtal. detectors, and means nothing for BC listening.
14. The Model 106-D is an adaptation from the Model 106, the primary difference being that Model 106 used a xtal. as DET and the 106-D uses a vacuum tube. Both were difficult to build and to operate, from all accounts. The Armstrong regenerative method was also incorporated into the Model 106-D.
15. Early tests for radio operators' licenses required the drawing and explanation of this receiver: they were called "Commercial Radio Operators" in those days.

"RETROSONIC" 3-TUBE CIRCUIT (ENGLISH), 1923

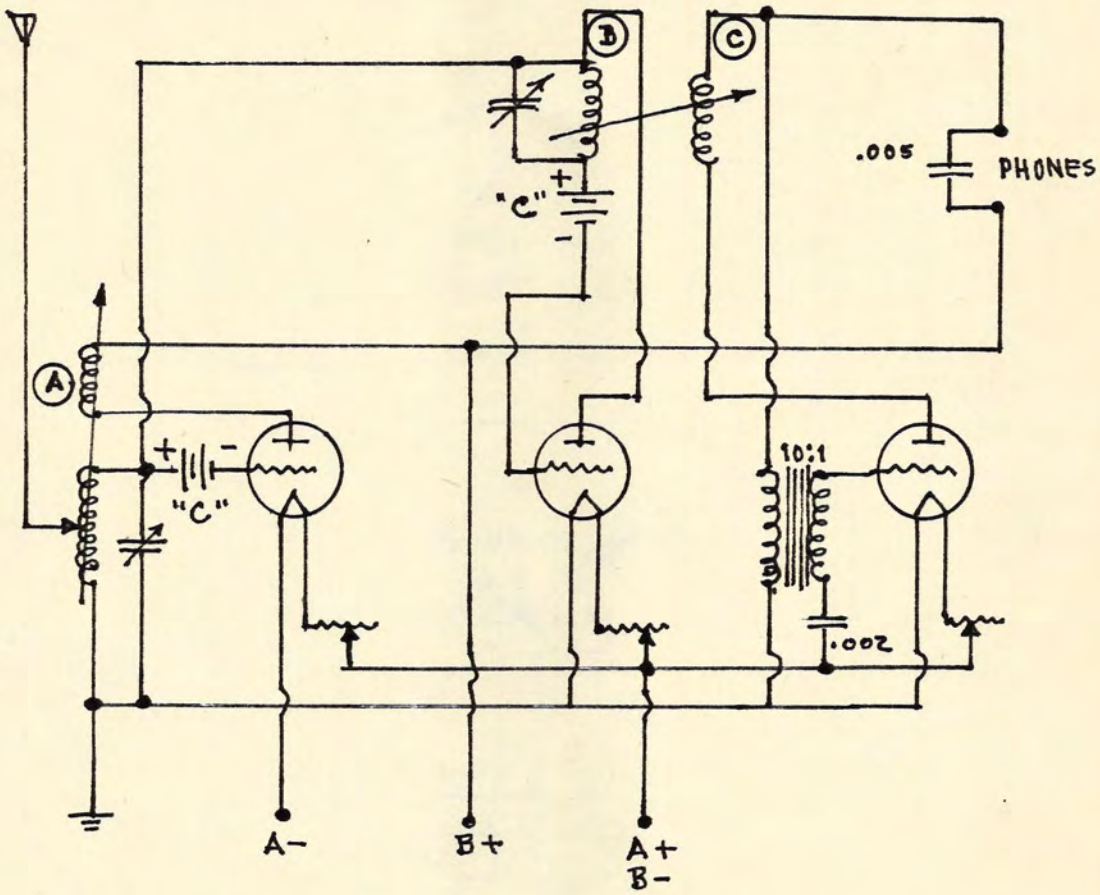

Ⓐ = SEC = 45T
Ⓑ = PRI = 64T } RF CPLNG.
Ⓒ = SEC = 89T

RF Coupling is comprised of a PRI coil located in the Loop circuit fed from the aerial, and a SEC coil deriving voltage from a B-Battery.

Set depends for its operation upon the application of a difference of potential between Plate and Grid of the remaining tube by means of the RF coupler.

MARCONI NAVAL DIRECTION FINDER, 1921

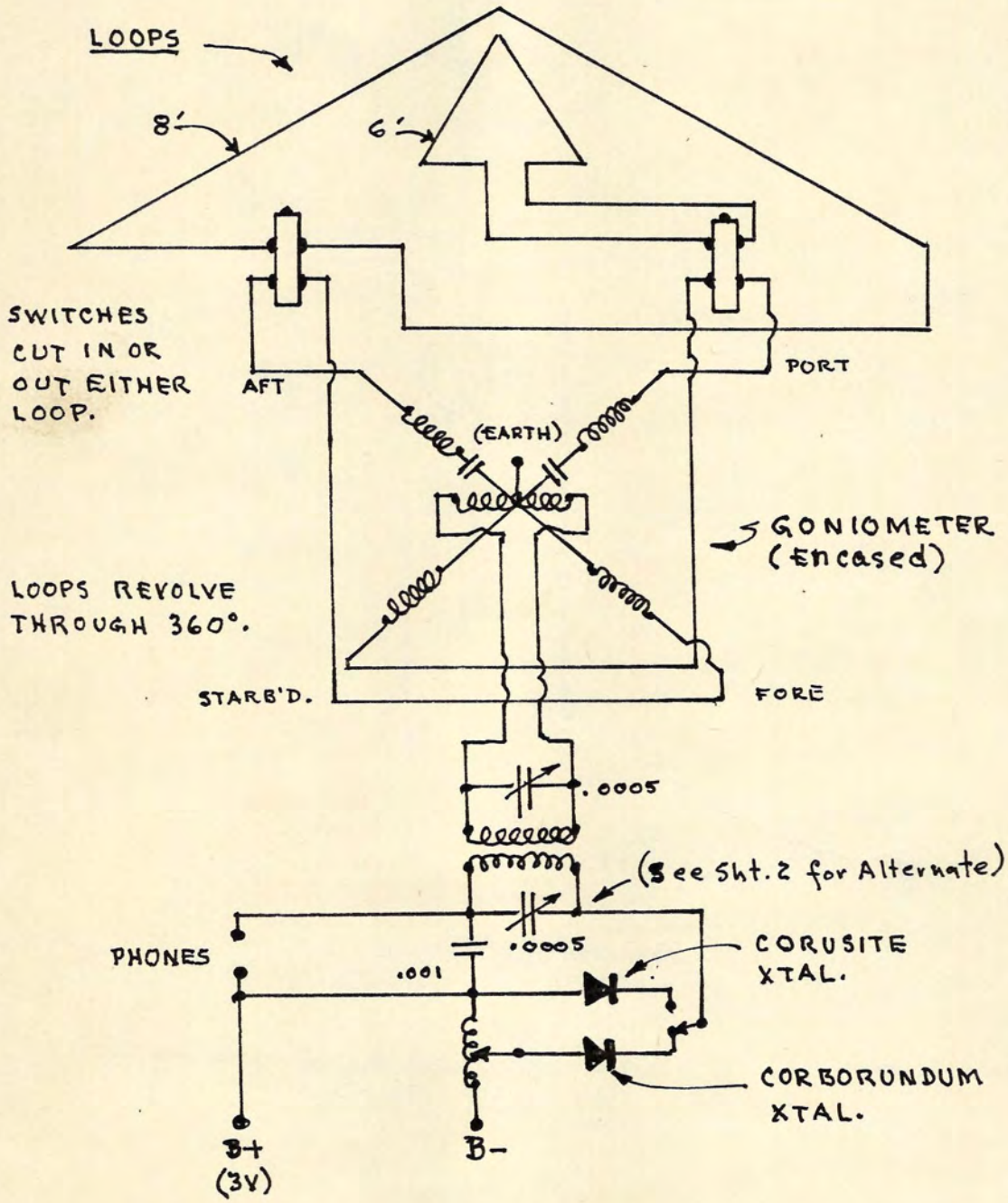

(RN 4·22/

NAVAL DIRECTION FINDER, Sht. 2

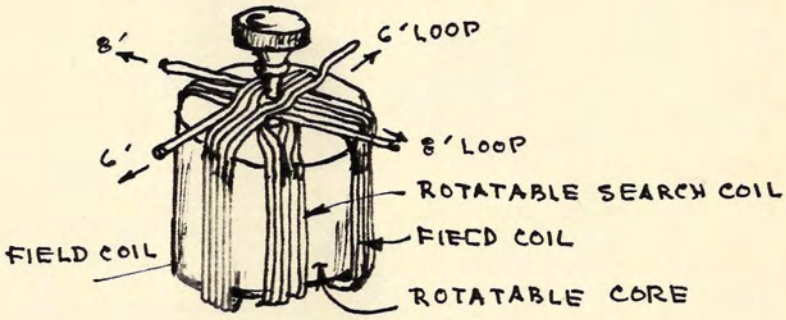

DIRECTION FINDING UNIT

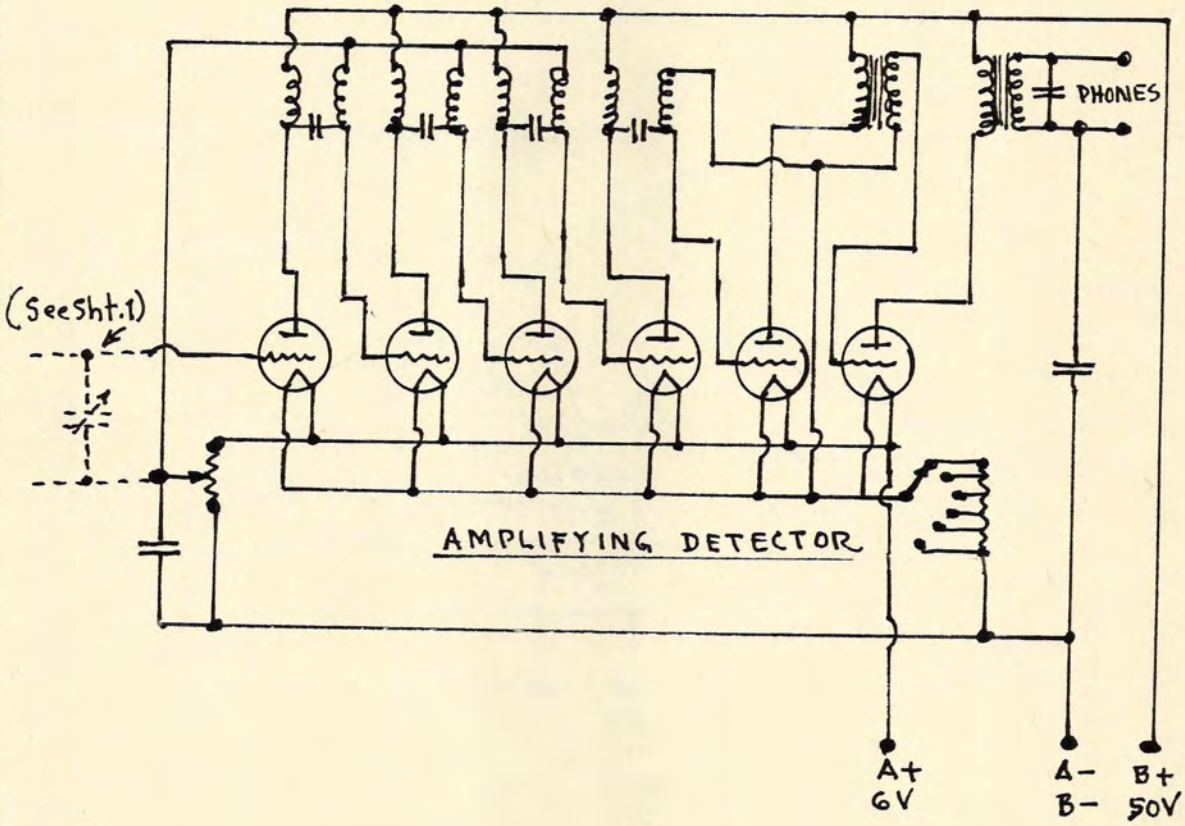

"TRINADYNE" PSEDUO-REFLEX (ENGLISH),1924

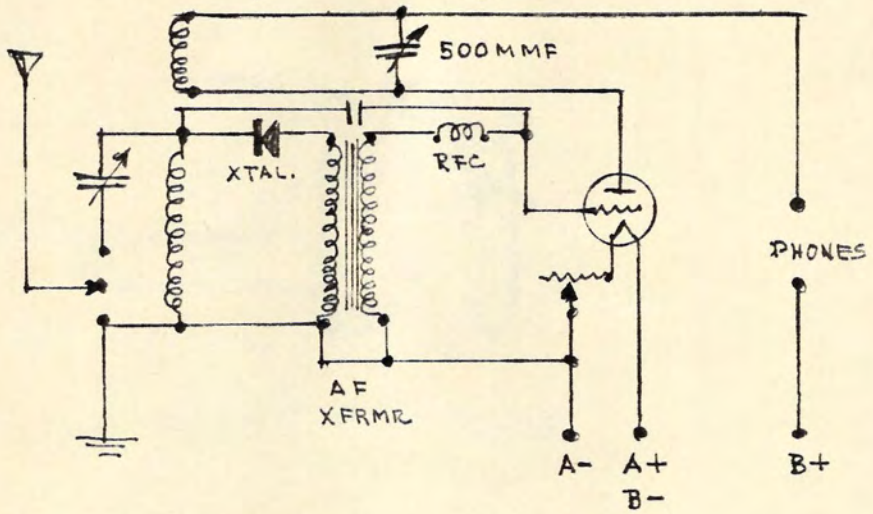

"FILADYNE" REGENERATIVE CIRCUIT, 1923

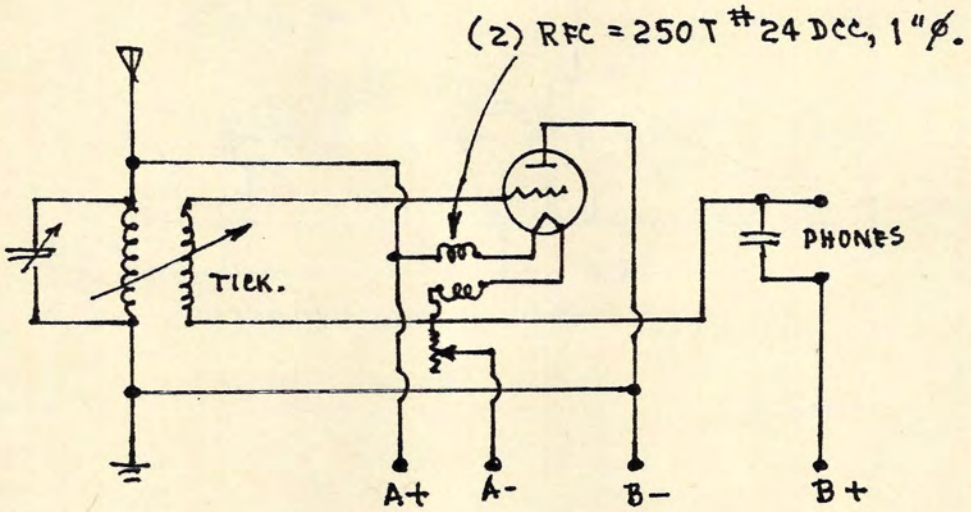

(An Interesting Circuit.)

THE STORY OF THE ARC Sht. 1

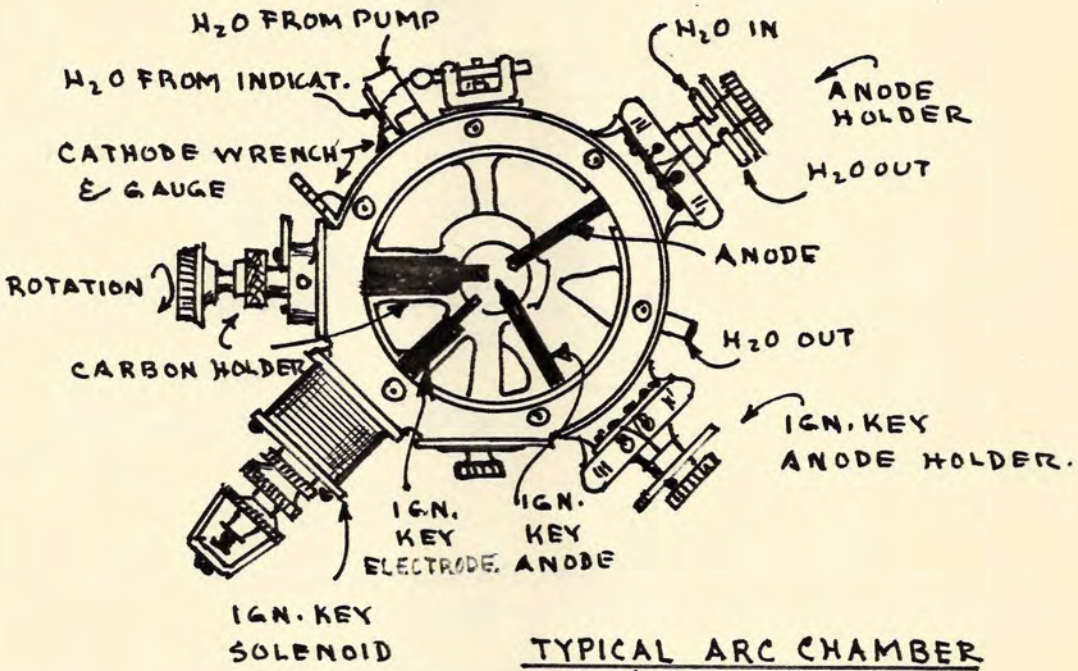

TYPICAL ARC CHAMBER (OPENED)

The method of generating oscillation by an arc using DC was first discovered by Prof. E. Thompson in 1892. It was developed mainly in the U.S., and were first installed on U.S. flag-ships, including the U.S.Navy.

The arc-transmitter was based upon the method of obtaining undamped RF oscillations by means of an electric arc. The arc was enclosed in a chamber (see above sketch) with one Atmosphere containing hydrogen. The electrodes were placed between the poles of an electromagnet, which produced a strong traverse magnetic field that tended to blow out the arc flame.

Carbon was used for the (-) electrode, while the (+) was made of copper, being water cooled. A condenser and a coil were connected in series, and the two leads shunted across the arc. Partial current flowing into the condenser caused the DC potential to rise. As the condenser continued to charge, the arc current was further reduced.

When the condenser started to discharge, arc current was increased, reducing the DC potential, and the cycle was repeated. The

THE STORY OF THE ARC Sht. 2

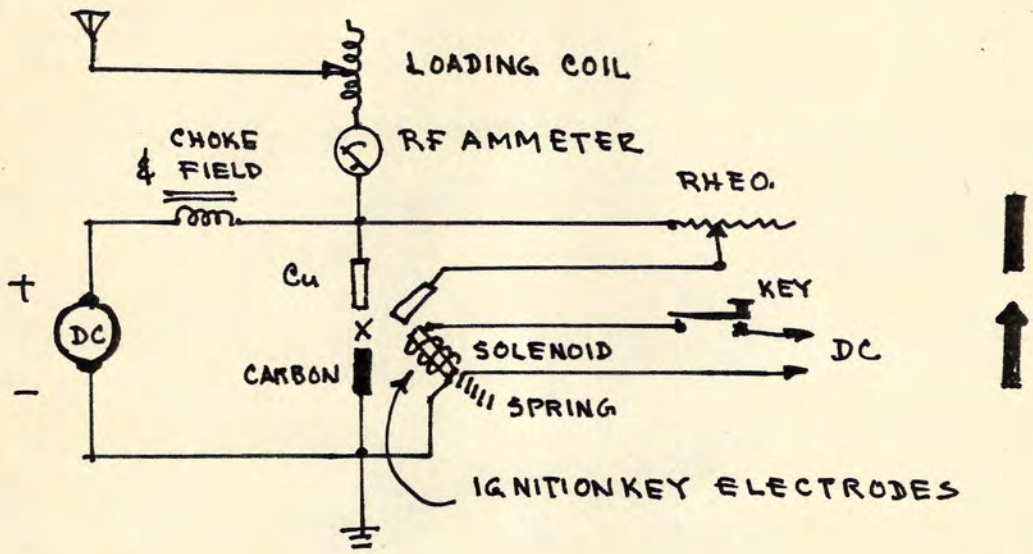

speed and frequency of this rise and fall was governed by the condenser capacity and the inductance in the circuit.

The DCV necessary to produce the oscillations depended upon the resistance of the oscillatory circuit. In a 2KW rig, the voltage would range from 250 to 400 volts; while a 5KW rig would used 500 volts. ANT to GND capacity was considered as the condenser, and the loading inductance as the circuit inductance. The transmitter consisted of:

1. A DC source.
2. An arc converter.
3. ANT loading inductance.
4. ANT and GND system.
5. A signalling device, such as a key ("bug").
6. Auxiliary and control equipment.

The arc converted the power supplied by the DC generator into RF energy with undamped current in the ANT circuit. The ANT circuit was the ANT loading inductance, arc electrodes, and GND. The combined choke and field coil prevented RF current from flowing back into the power source, and also served to steady the arc. The frequency of the undamped current depended upon the inductance and the capacity of the circuit. Inductance was varied by making changes in the wave-length at the ANT coil.

Length of the arc flame was adjusted for maximum ANT current at all times. The carbon (-) electrode could be turned up or down. When alcohol was used to supply the hydrogen gas, the electrode was as shown

above or in the DeForest schematic. Kerosene gave slightly better results, but soot build-up from the burning kerosene was a problem. There were four main methods of signalling with an arc transmitter:

1. "Back-shunt".
2. Coupled compensation loop.
3. Ignition key.
4. Chopper (used on SW up to 1,000 meters).

The wave produced by the chopper method was called an ICW - "Interrupted Undamped Signal".

The coupled compensation method consisted of a single turn of high-frequency cable placed in close inductive relation to the lower end of the loading inductance. When the loop was shorted by the key, induction was reduced, hence reduced wave-length.

The chopper consisted of a commutator wheel driven by a small motor, the wheel being connected in series with the loop. The chopper opened and short-circuited the coupled loop at high speed. The RF emitted was at two wave-lengths, as when using the key, but the speed of the alternations was such that they sounded as a single note.

The ignition key method employed two additional electrodes in the arc chamber, one of which was stationary. The movable electrode served as the signalling key. When in contact, the two electrodes extinguished the arc. When separated, the flame produced was blown by the magnetic field into the gap between the two Main electrodes of the arc, thereby re-igniting the arc.

The arc then oscilated upon the ANT circuit and signalling was accomplished by moving the ignition key in and out to form dots and dashes. The movement was controlled through the key by an electro-magnet and a spring. The spring held the electrodes together and the electro-magnet caused them to open whenever the key was depressed,

The power-absorbing resistor was adjusted so that the DC output of the generator remained constant whether the arc was operating on the ANT or whether it was extinguished. This was the most critical adjustment of the early arc transmitters.

* * *
* *
*

GROUND & COUNTERPOISE NOTATIONS

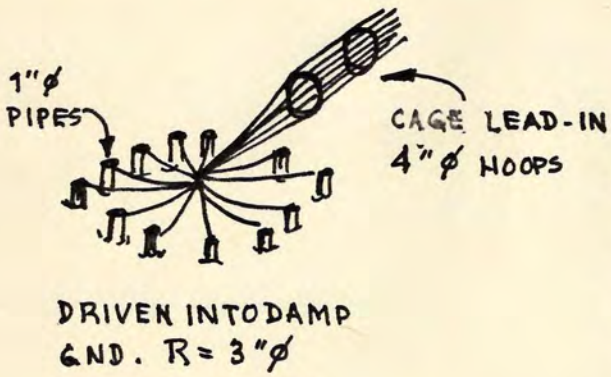

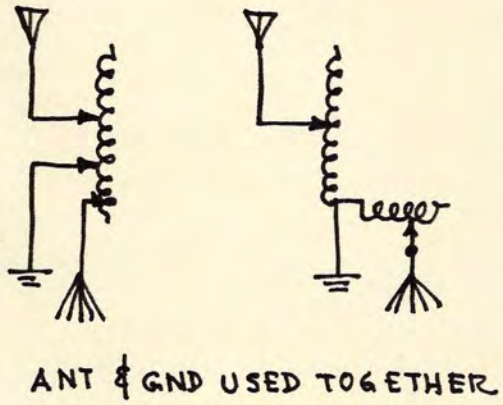

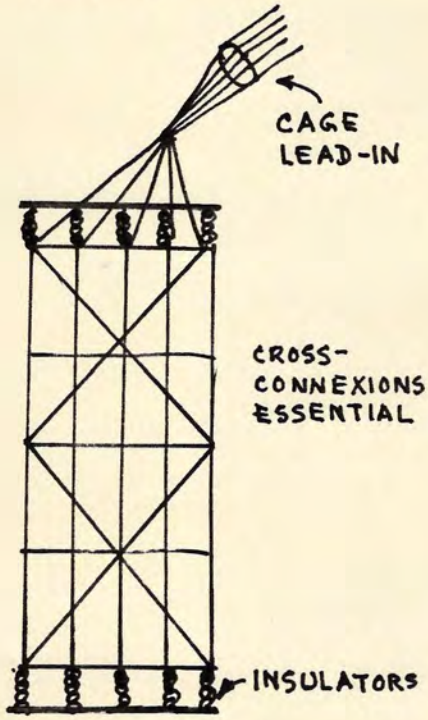

The use of grounds and counterpoises was crudely understood for a long time in the early days, yet use of both were critical to both reception and transmission. Some rather freakish counterpoises appeared in our early media from time to time, but the final consensus was that there were but three types which were effective: buried plates or a single wire; radial wires with a cage lead-in; flat configurations nicely adjusted above and below the station. Among the helpful hints offered were:

1. Damp ground was helpful.
2. When GND leads were longer than three feet, they should be insulated.
3. A single wire counterpoise was better than none at all.
4. The radial type should have 8 to 10 pipes as stakes, 1"ø.
5. For flat plat counterpoises, holes should be 4 to 6 frrt deep, and the plate contacting the earyh should be salted.
6. Electrical length of lead-ins should be the same.
7. Method for tuning the GND was to leave 2 or 3 extra turns of the OSC transformer on the GND end of the transmitter; then tune the set to the longest GND lead.

●

1DH AIRCRAFT TRANSMITTER, 1920

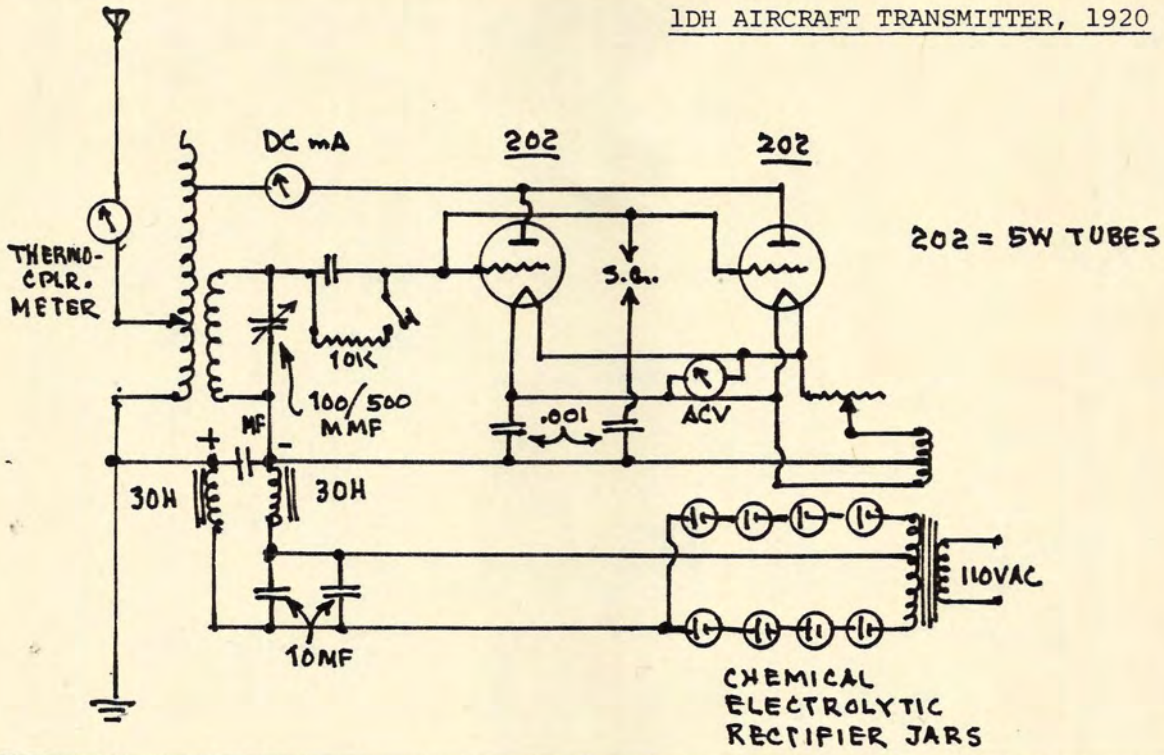

LOW POWER XMTR. USING GND & COUNTERPOISE

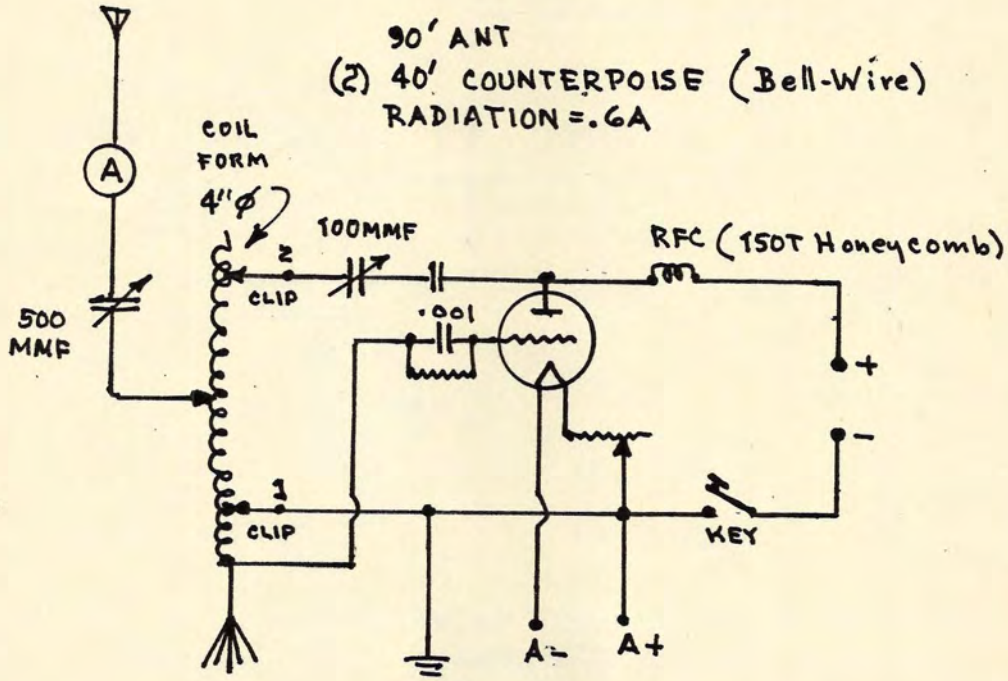

HARTLEY CIRCUIT TO ELIMINATE CHIRPS & CLICKS

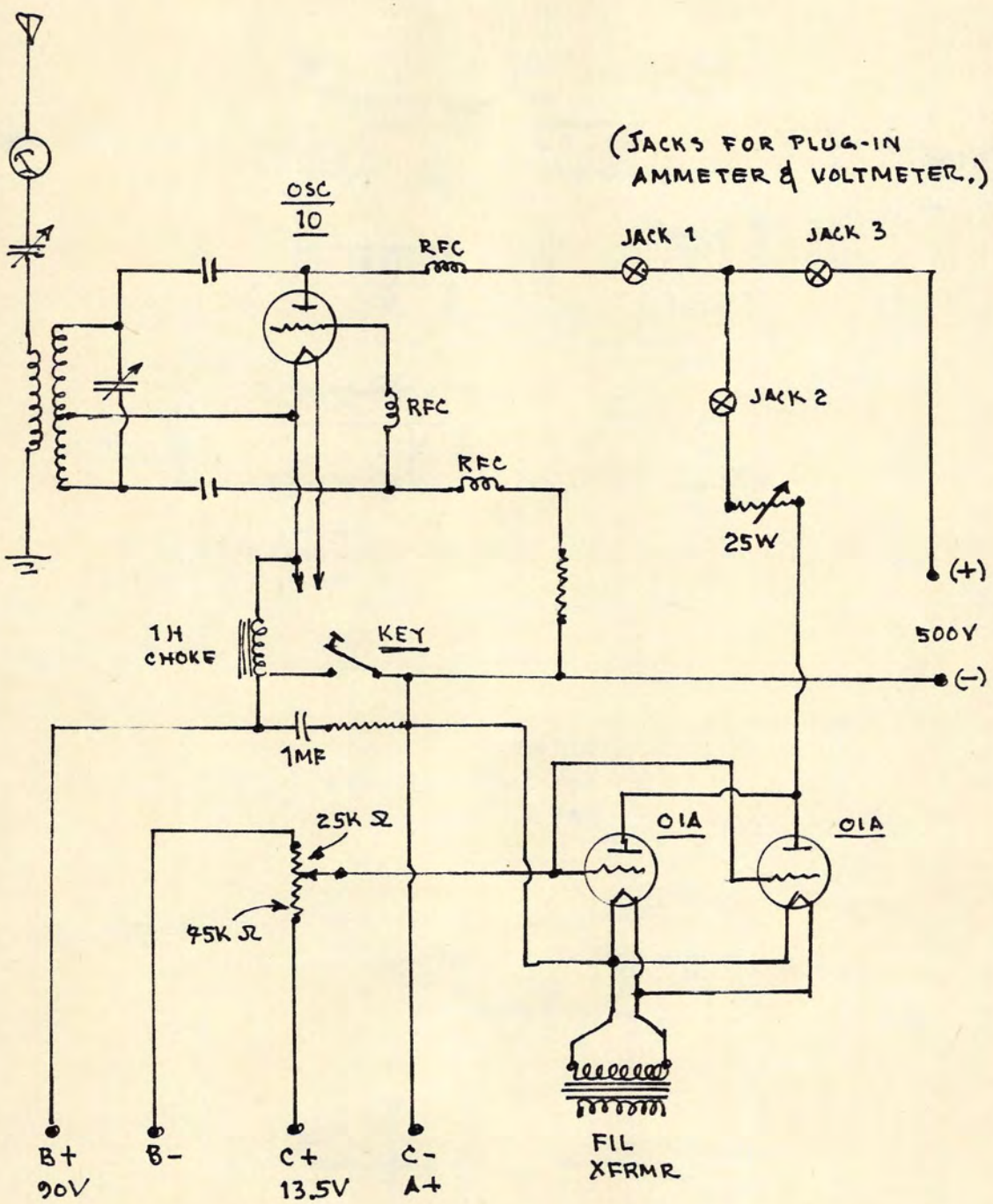

1H CHOKE = 1,500/2,000T #22 on Iron Core 1" ■. The 110V Winding From A TOY XFRMR. may be used.

LOW POWER TRANSMITTER, 1926

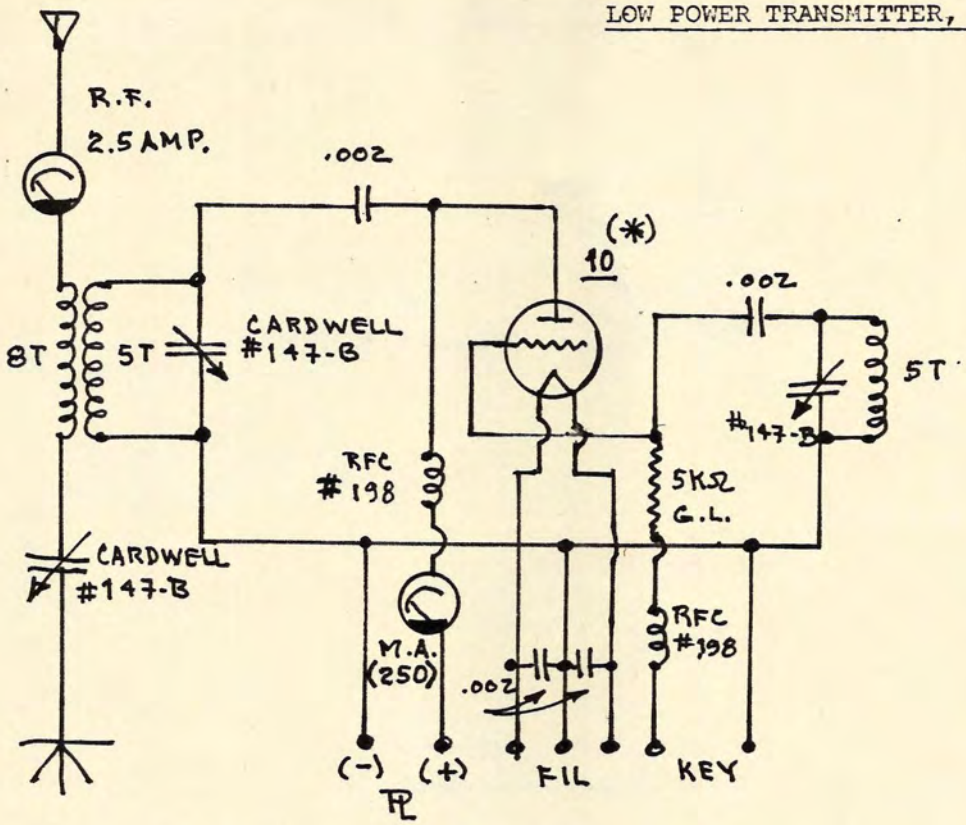

(*) w/ 300V ON THE PLATE.

NOTE:

ALL COILS NOT DESIGNATED BY CARDWELL NOS. WERE COPPER RIBBON WOUND EDGE-WISE ON 5¼" Ø FORMS. RIBBON = ¼" W x 1/16" THICK.

FIXED COND. = DUBILIER # 577-A, 601, or 580.

(THE 50W TUBE MAY BE USED)

SUB-PANEL = 10" x 26" x 3/8".
PANEL = 5" x 12" x 3/8".

GRID & TR TUNED TO SHOW NO CURRENT IN TR METER w/ KEY UP, OR A VERY SMALL CURRENT. DEPRESSING KEY SHOULD RESULT IN A LARGE TR CURRENT.

THE "SOUTHERN CROSS" AIRCRAFT XMTR.

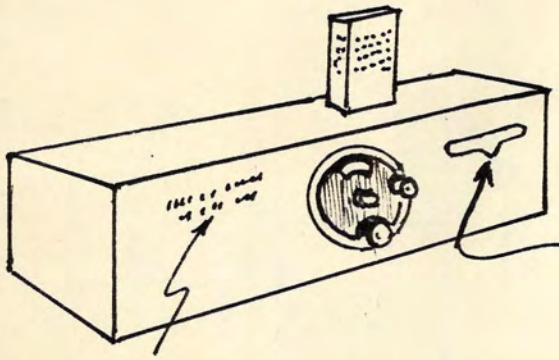

NAME-PLATE

HEINZE & KAUFMANN - A San Francisco-based firm; now in the jewellry business & optical offices.

HIGH FREQ. AIRCRAFT XMTR.

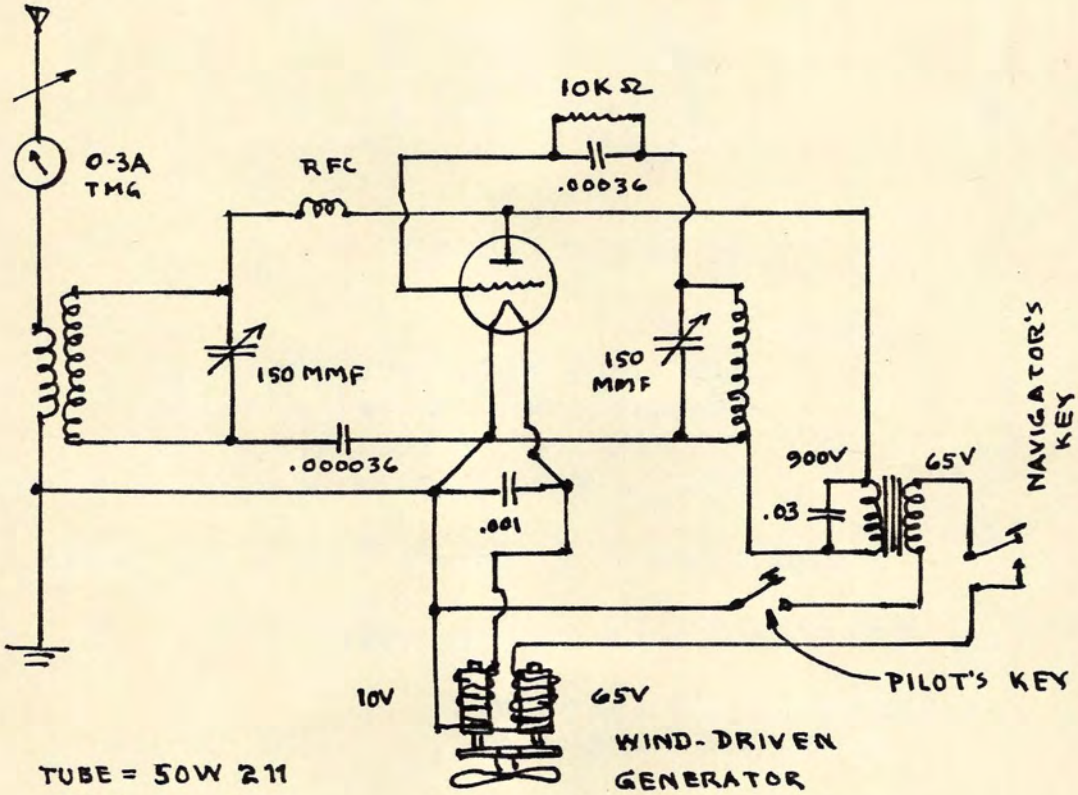

TUBE = 50W 211
33.4 METERS

6AKW SW. RECEIVER & TRANSMITTER, 1924

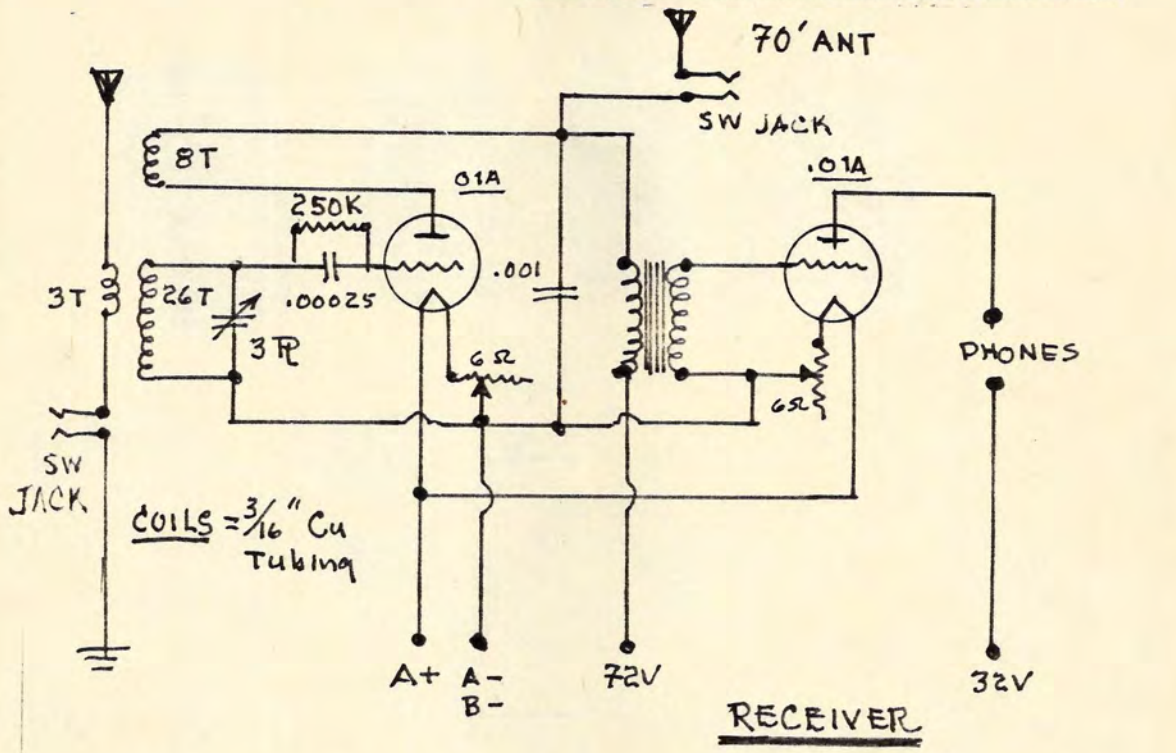

RECEIVER

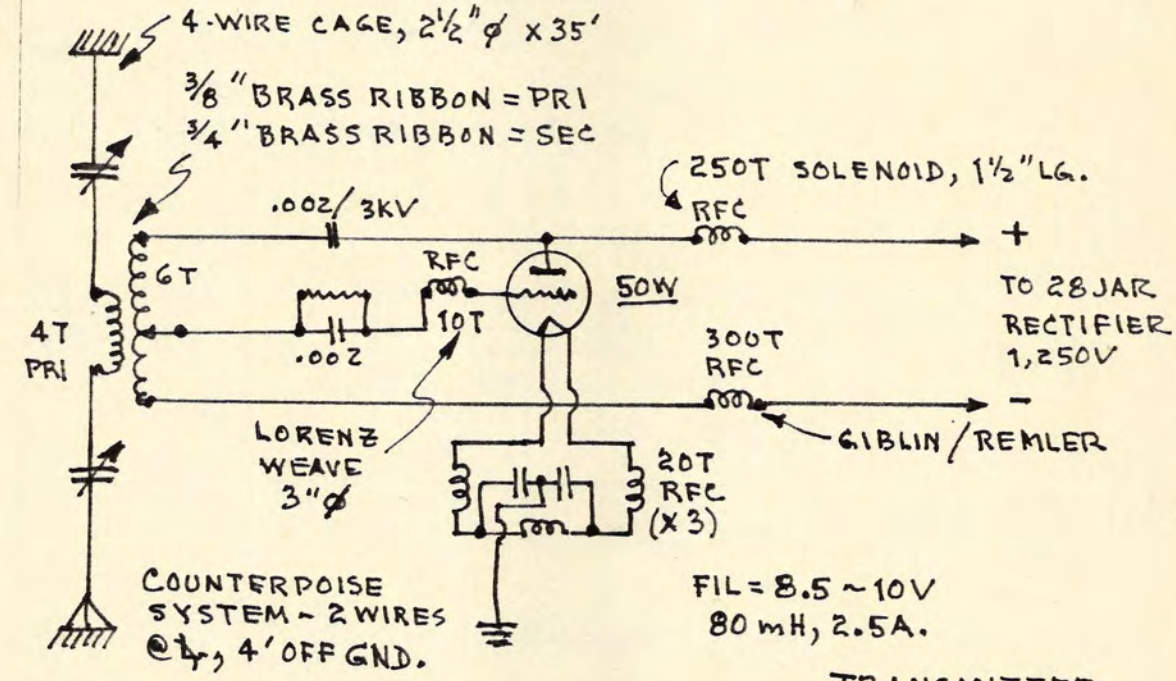

TRANSMITTER

(RJ 6-25) NOTE: RADIATES w/ 2 ANTENNAE!

THE "PARADEX" UNITISED RADIO, 1922
(Pacific Radio Exchange, S.F.)

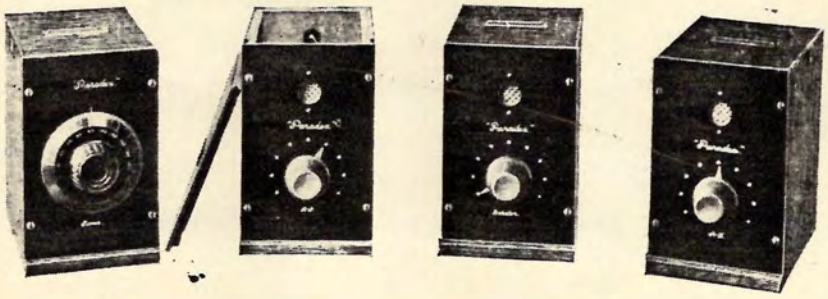

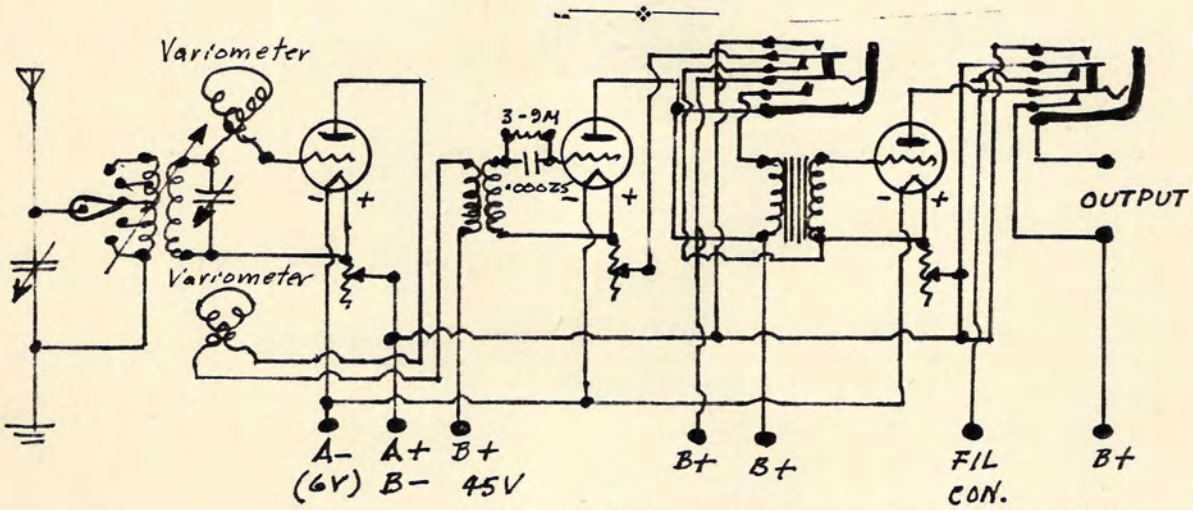

All B+ = 22.5 VDC, unless noted.

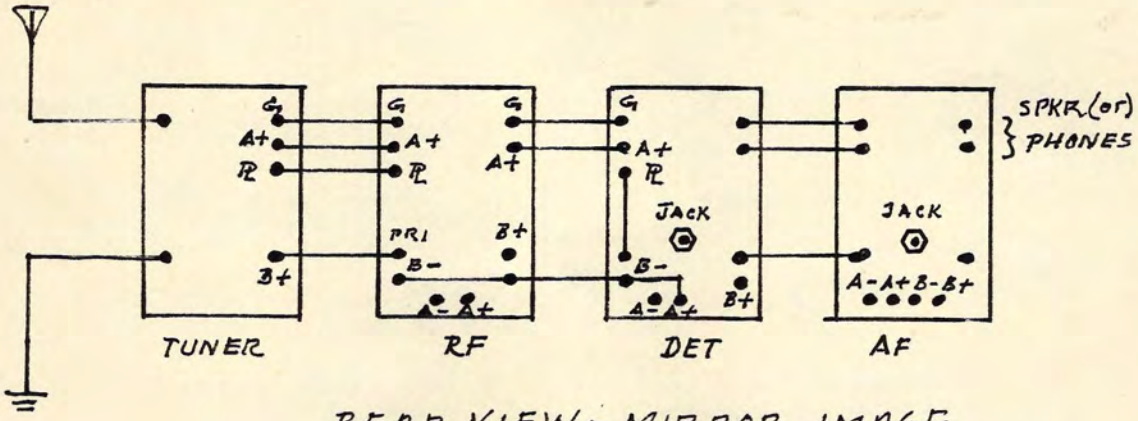

REAR VIEW - MIRROR IMAGE

(RD

Beyond Rider!

The author and the publishers take pleasure in announcing that Howard W. Granoff has been selected as the exclusive distributor for United States sales of these unique Sketch-Books and Monographs, and other related writings of the author - D.H.MOORE.

Comments and suggestions from readers of these dedicated works are always welcome, and will be given an immediate hearing, with an eye to improving future editions. While these unique Sketch-Books and Monographs are the labour of one man, the vintage radio hobby remains, as with any legitimate hobby, a shared enthusiasm. These works, then, are a sharing of one man's affection for vintage radio.

Olde Tyme Radio Co.

2445 LYTTONSVILLE RD.

SILVER SPRING, MD.-20910

(301) 585-8776

OTHER PUBLICATIONS AVAILABLE

THE VINTAGE RADIO IDENTIFICATION SKETCH-BOOKS of D.H.MOORE:

Vol. I - Introductory Essays
Vol. IIA - Broadcast Receivers, A-L
Vol. IIB - Broadcast Receivers, M-Z
Vol. III - Short-Wave Receivers
Vol. IV - Power Supplies & Amplifiers
Vol. V - Hardware & Accessories
Vol. VI - Early Test Equipment
Vol. VII - General Technical Data
Vol.VIII - The Early Years: 1910-1925
Vol. IX - Supplemental Data

SEPÈRATE MONOGRAPHS:

PILOT	*VICTOREEN*	*ULTRADYNE*
REMLER/BEST	*STROBODYNE*	*BROWNING-DRAKE*
SCOTT (Early)	*BREMER-TULLY*	*NATIONAL/HAMMARLUND*
INFRADYNE	*DOERLE*	*SARGENT-RAYMENT*

THE MYSTERIOUS REFLEX

Other Monographs are in preparation, and will be announced as published.

COPIES OF ORIGINAL CONSTRUCTION BLUE-PRINTS:

ULTRADYNE L-2	VICTOREEN "Standard"
TROPODYNE	VICTOREEN "Universal"
COUNTERPHASE 4	BEST 115 KC
COUNTERPHASE 6	PERIFLEX
BROWNING-DRAKE	HAMMARLUND-ROBERTS
SARGENT 8-34	CONSRAD PORTABLE, etc.

The Editorial Group, Ltd.

D. H. MOORE, A.D.I
DIRECTOR

"Specialists In Technical Documentations"

P.O. BOX 521
PALO ALTO, CALIF
94302